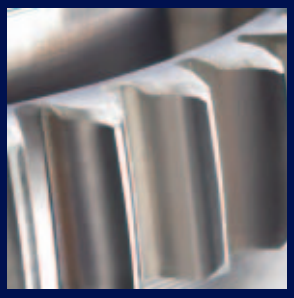

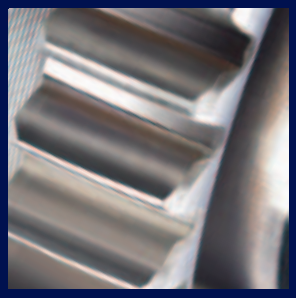

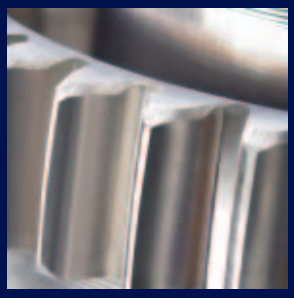

**Innovative Power Transmission**

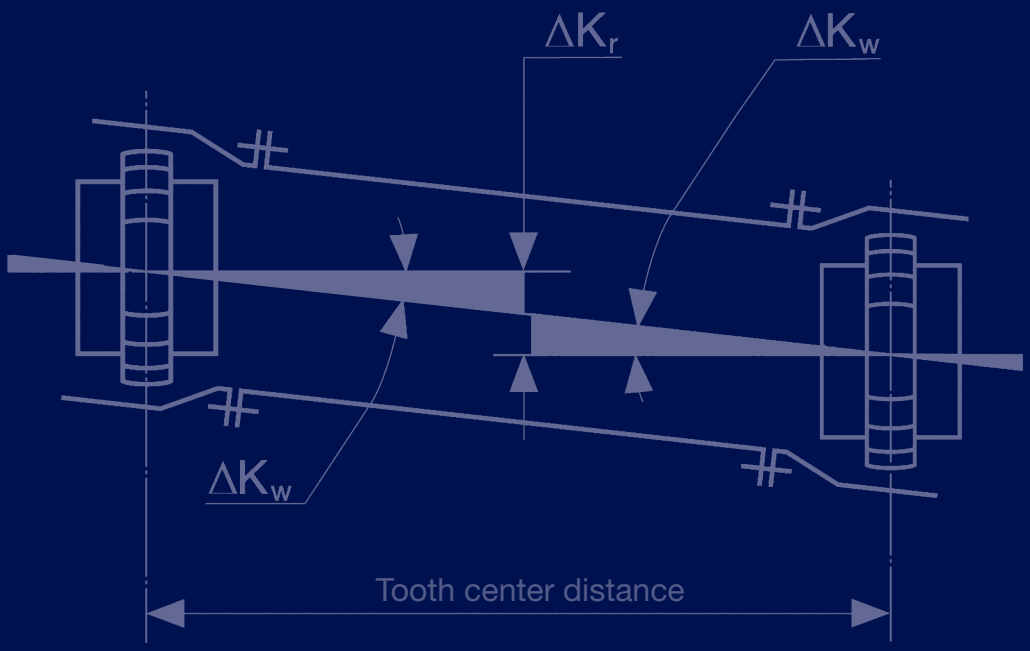


# Curved Tooth Couplings
# Basic Construction Series

*owner's choice*

# Curved Tooth Couplings
# Basic Construction Series

## Production process

The production process of the curved tooth couplings was invented by **Albert Tacke** more than 60 years ago and was already patented in 1939.

The worldwide use of the curved tooth coupling in all fields of technology provides proof of the high recognition and capability of this coupling design.

We offer the most comprehensive range of couplings worldwide. The multitude of construction series and options allows complete freedom to engineer the proper shaft connection for your particular application. It also gives you the certainty to select the optimum solution, even for the most severe operation conditions.

## A coupling range with a system behind it

Divided into three groups with different constructional features, this product range offers an extensive variety of diverse construction forms. The range is divided into three groups, because each applications has its specific demands on a shaft connection. These requirements can often be met with simple solutions, but sometimes, more complex designs are required. Yet, the main objective is to find the optimum solution in technical as well as in economic terms.

## Quality

Prime quality is a matter of fact. This applies equally to all the coupling designs. Constructional differences do not have any influence on the quality of the coupling or on its constituent parts. All the components are produced in compliance with the same strict quality standards. Many of the coupling types are composed of identical, fully interchangeable components.

2

## Improvements

- The nominal size of the coupling is no longer synonymous with the maximum permissible hub bore.
- Larger hub bore capacities allow a more favorable coupling size selection.
- Higher permissible angular misalignment capacity provides added safety in the event of shaft offset.
- Precise and subtle size determination due to the application of service factors.
- Re-structured product range ensures simplified coupling selection.

1

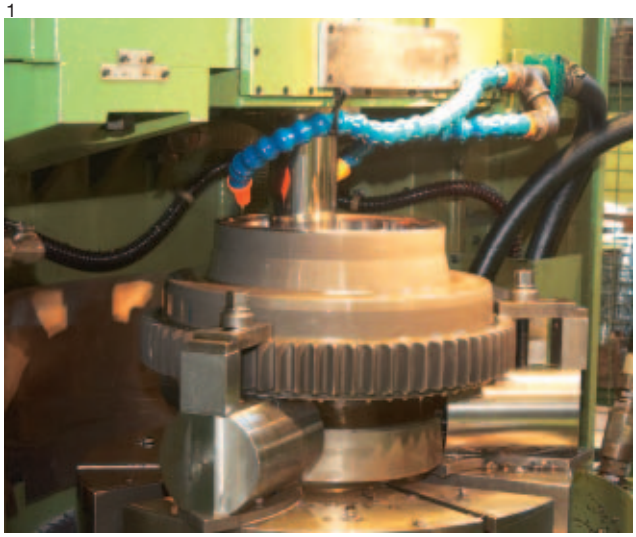

3

1 Gear slotting machine for the production of internal curved teeth

2 Assembly of curved tooth couplings®

3 Tooth milling machine with automatic workpiece transfer


RENK Aktiengesellschaft, Rheine Works · Phone: +49 5971 790 0 · Fax: +49 5971 790 208 and 790 256

## Lubricants

The couplings of the SB series can either be lubricated with oil or with grease. The advantage of oil lubrication is that the lubricant can be replaced in a quicker and easier manner. On top of this, the SB coupling types have a larger space for the lubricant. Lubrication is ensured even in case of a damaged sealing. This equally applies to oil and grease lubrication.

## Availability

The basic designs of the coupling sizes, up to 200 and 225, resp., are available from stock. Depending on the construction series, this covers hub bore diameters from 12 mm to max. 260 mm. This also applies to coupling designs with spacer or intermediate shaft, but without any additional parts. Even couplings that are subject to the acceptance by the classification societies ABS, DNV, GL or LRS are not exempt from this.

Ex-stock delivery means quick help in the event of an average.

4

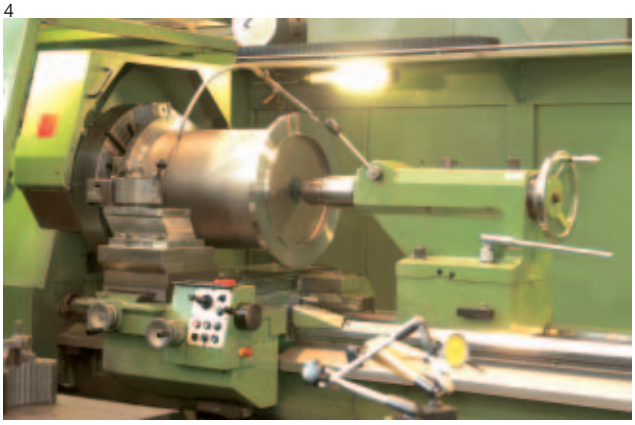

6

## Custom-made designs

Irregardless of the quantity, special designs can be supplied in any size. The distinction is made between modified standard types and custom-made designs. Modified coupling models are mainly composed of elements from the basic construction types which are slightly modified or equipped with accessory components. Special designs are usually completely custom-made couplings. Examples from the comprehensive range of special designs are shown on pages 46-47.

5

7

4 Machining of a spacer on a universal turning lathe

5 CNC drilling machine

6 Coupling sleeves

7 Coupling hubs of the curved tooth coupling type VLBGkT 200 spec. for use in vertical thruster drives

# Quality Features

# Construction Series

## SB

- Technically complex design
- Split housing with bolted-on covers
- Advanced cover design for high misalignment capacity
- Misalignment capacity of ± 1.5° per coupling half, for special designs up to ± 3°
- Optionally available for oil or grease lubrication
- Low strain on seal rings due to optimum arrangement in the sleeve cover
- Large lubricant space in leak-proof design
- Lubrication is ensured, even with damaged seal ring
- Easy replacement of seal rings
- Tooth tip centered, optionally available with cover centering
- Large tooth center distance
- Combinable with HYGUARD® safety couplings, brake disks, torque metering shafts or other accessory equipment.

## SBk

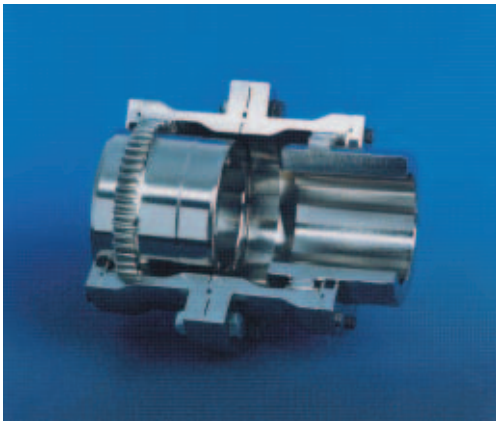

- Split housing with bolted-on covers
- Misalignment capacity of ± 0.75° per coupling half
- Grease lubrication, optionally with long-life grease filling
- Easy replacement of seals due to removable covers
- Tooth tip centered
- Large tooth center distance
- Large hub bores
- Reversible hubs to serve different shaft distances
- Combinable with HYGUARD® safety couplings, brake disks, torque metering shafts or other accessory equipment

## LBk

- Split housing
- Misalignment capacity of ± 0.75° per coupling half
- Grease lubrication, optionally with long-life grease filling
- Tooth tip centered
- Large hub bores
- Low weight due to compact and lightweight sleeve
- Variable overall length, hubs can be shortened
- Combinable with HYGUARD® safety couplings, brake disks, torque metering shafts or other accessory equipment


RENK Aktiengesellschaft, Rheine Works · Phone: +49 5971 790 0 · Fax: +49 5971 790 208 and 790 256

# Table of Contents

# Overview


| Coupling Configurations | Design | Type Series | Page |
|---|---|---|---|
| 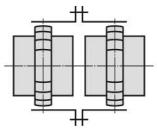 | Basic design | SB | 8 - 9 |
| | | SBk | 10-11 |
| | | LBk | 12 |
| | Basic design with retaining ring | SBR | 13 |
| | | SBRk | 14 |
| | | LBRkn | 15 |
| 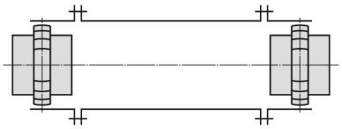 | Spacer design | SBL | 16 |
| | | SBLk | 17 |
| | | LBLk | 18 |
| 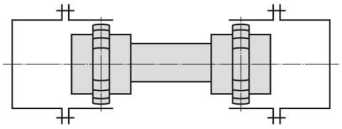 | Spacer design with retaining ring | SRL | 19 |
| | | SRLk | 20 |
| | | LRLkn | 21 |
| | Intermediate shaft design | SBG | 22 |
| | | SBGk | 23 |
| | | LBGk | 24 |
| 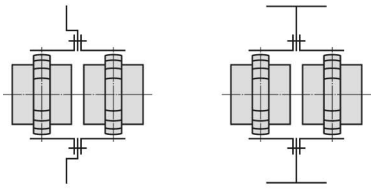 | Intermediate shaft design with retaining ring | SRG | 25 |
| | | SRGk | 26 |
| | Design with brake disk for shoe brake | SBD | 27 |
| | | SBkD | 29 |
| | | LBkD | 31 |
| 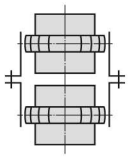 | Design with brake disk for disk brake | SBT | 28 |
| | | SBkT | 30 |
| | | LBkT | 32 |
| | Vertical design for oil or grease lubrication | VSB | 33 |
| | For grease lubrication only | VLBk | 34 |
| 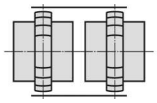 | Design with one-piece coupling sleeve | HBk (TRAVEX®) | 35 |


## Technical Data


| | |
|---|---|
| Curved tooth couplings - classification to standard motors | 36 |
| Adaptor plates, puller threads for the SB type series | 37 |
| Adaptor plates, puller threads for the SBk type series | 38 |
| Adaptor plates, puller threads for the LBk type series | 39 |
| Lubricant quantities for spacers | 40 |
| Torsional stiffness data for couplings, spacers, intermediate shafts | 41-43 |
| Weights and mass moments of inertia of spacers | 42 |
| Parallel misalignment in case of larger hub distances | 43 |
| Keyway sealing and tooth backlash control device | 44 |
| Shaft-hub connections | 45 |
| Special designs | 46-47 |
| HYGUARD® Safety Couplings | 48-49 |
| EU Directive 94/9 EG “ATEX” | 50 |
| Calculation formulae | 51 |

# Coupling Selection and Size Determination

**Table 1 - Service Factors**

| Machine | Service Factor $K_1$ [1] |
|---|---|
| **Excavator** | |
| Chain bucket excavators | 2.0 |
| Travelling gear (caterpillar) | 1.8 |
| Travelling gear (rails) | 1.6 |
| Suction pumps | 1.6 |
| Bucket wheels | 1.8 |
| Cutter heads | 2.0 |
| Slewing gear | 1.4 |
| Winches | 1.6 |
| **Mining, stones** | |
| Crushers | 2.24 |
| Rotary kilns | 1.8 |
| Mine ventilators | 2.0 |
| Vibrators | 1.6 |
| **Chemical plant** | |
| Agitators (thin liquid) | 1.25 |
| Agitators (viscous liquid) | 1.6 |
| Centrifuges (light) | 1.4 |
| Centrifuges (heavy) | 1.8 |
| **Conveyor plants** | |
| Conveyors | 1.8 |
| Slatted conveyors | 1.6 |
| Belt conveyors (bulk materials) | 1.4 |
| Slatted conveyors (piece goods) | 1.6 |
| Pocket belt conveyors | 1.25 |
| Bucket chain conveyors | 1.4 |
| Rotary conveyors | 1.4 |
| Elevators | 1.4 |
| Bucket type flour conveyors | 1.25 |
| Lifts | 1.8 |
| Apron conveyors | 1.4 |
| Screw conveyors | 1.4 |
| Steel belt conveyors | 1.4 |
| Redler conveyors | 1.4 |
| **Blowers, ventilators** | |
| Rotary piston blowers | 1.4 |
| Blowers (axial and radial) | 1.25 |
| Cooling tower ventilators | 1.4 |
| Induced draught fans | 1.4 |
| Turbo-blowers | 1.25 |
| **Generators, converters** | |
| Frequency converters | 2.24 |
| Generators | 1.4 |
| Welding generators | 2.24 |
| **Rubber and plastics machinery** | |
| Extruders | 1.6 |
| Calenders | 1.6 |
| Kneader machines | 1.8 |
| Mixers | 1.8 |
| Rolling plant | 1.8 |
| **Wood processing machines** | |
| Debarking drums | 1.8 |
| Planers | 1.4 |
| Frame saws | 1.4 |
| **Steel plants** | |
| Blast furnace blowers | 1.4 |
| Converters | 2.0 |
| Inclined blast furnace elevators | 1.8 |
| Slag crushers | 1.8 |
| **Cranes** | |
| Luffing gear | 1.25 |
| Traversing gear | 1.6 |
| Hoists | 1.4 |
| Slewing gear | 1.4 |
| Winches | 1.25 |
| **Metalworking** | |
| Press brakes | 1.6 |
| Sheet straighteners | 1.8 |
| Hammers | 1.8 |
| Shears | 1.6 |
| Forging presses | 1.8 |
| Stamping machines | 1.8 |
| **Mills** | |
| Hammer mills | 2.0 |
| Ball mills | 2.0 |
| Suspended roller mills | 2.0 |
| Impact mills | 2.0 |
| Rod mills | 2.0 |
| Roller mills | 2.0 |
| **Food machinery** | |
| Fillers | 1.25 |
| Kneading machines | 1.4 |
| Packaging machines | 1.25 |
| Sugar cane crushers | 1.6 |
| Sugar cane cutters | 1.6 |
| Sugar cane mills | 1.8 |
| Sugar beet cutters | 1.6 |
| Sugar beet washing plant | 1.6 |
| **Paper machines** | |
| Couch presses | 1.8 |
| M.G. cylinders | 2.0 |
| Reels | 1.8 |
| Beating engines | 1.6 |
| Pulp grinders | 1.8 |
| Calenders | 1.6 |
| Wet presses | 1.8 |
| Opening machines | 1.8 |
| Agitators | 1.8 |
| Suction presses | 1.6 |
| Suction couch rolls | 1.8 |
| Drying cylinders | 2.0 |
| **Presses** | |
| Folding presses | 1.8 |
| Briquetting presses | 2.5 |
| Eccentric presses | 2.0 |
| Forging presses | 2.25 |
| Brick moulding presses | 2.5 |
| **Pumps** | |
| Centrifugal pumps (thin liquid) | 1.25 |
| Centrifugal pumps (viscous liquid) | 1.4 |
| Reciprocating pumps ($U \leq 1:100$) | 1.8 |
| Reciprocating pumps (U=1:100-200) | 1.6 |
| Plunger pumps | 2.0 |
| Sludgers | 1.4 |
| ELMO-Vacuum pumps | 1.5 |
| **Textile machines** | |
| Winders | 1.6 |
| Printing and drying machines | 1.6 |
| Tanning vats | 1.6 |
| Calenders | 1.6 |
| Opening machines | 1.6 |
| Weaving looms | 1.6 |
| **Compressors** | |
| Reciprocating piston compressors ($U \leq 1:100$) | 2.0 |
| Reciprocating piston compressors (U=1:100-200) | 1.6 |
| Turbo compressors | 1.6 |
| **Rolling mills** | |
| Sheet metal shears | 1.8 |
| Sheet turning machines | 1.6 |
| Ingot slab mills | 2.0 |
| Block conveyors | 1.8 |
| Block pushers | 2.0 |
| Tape and wire reels | 1.4 |
| Descalers | 1.6 |
| Sheet mills | 1.8 |
| Plate mills | 2.0 |
| Cold rolling mills | 2.0 |
| Track-type tractors | 1.6 |
| Billet shears | 1.8 |
| Colling beds | 1.4 |
| Transfer skids | 1.4 |
| Roller tables (light) | 1.4 |
| Roller tables (heavy) | 1.8 |
| Roller levellers | 1.6 |
| Trimming shears | 1.4 |
| End shears | 1.8 |
| Looplifters | 1.4 |
| Roller control gear | 1.4 |

1) The service factor $K_1$ is applicable to drives by electric motor or turbine. For drives involving hydraulic motors or internal combustion engines, the factor $K_1$ has to be multiplied by 1.1.

## Size Determination

Equation for continuous power:

$$\frac{P_N}{n} \cdot K_1 \leq \frac{P_{KN}}{n} \text{ (kW · min)}$$

$P_N$ = max. continuous power (kW)

$n$ = operating speed (rpm)

$K_1$ = service factor from Table 1

$\frac{P_{KN}}{n}$ = power rating acc. to dimension table (kW · min)

Equation for continuous torque $T_N$

$$T_N \cdot K_1 \leq T_{KN}$$

$$T_N = \frac{P_N}{n} \cdot 9550 \text{ (Nm)}$$

$$T_{KN} = \frac{P_{KN}}{n} \cdot 9550 \text{ (Nm)}$$

Permissible additional loads:

max. starting load of coupling $= 1.5 \cdot P_{KN}/n$ for $10^5$ LC

max. short-circuit load of coupling $= 3 \cdot P_{KN}/n$ for $10^3$ LC

LC = load cycle

If higher angular or parallel misalignments occur during operation, it may be necessary to reduce the max. permissible operating speed. In this case, the speed factors listed in Table 2 have to be used.

The maximum permissible bore diameter is a further criterion in coupling selection. For this reason, the bore capacity has to be checked after having determined the coupling size on basis of the power data. If the bore dimension does not allow to install the shaft, a larger coupling size has to be selected.

## Important note

The values listed in the dimension tables for the maximum permissible bore only apply to keyed connections, if the keyway does not exceed the dimensions according to DIN 6885. Please consult RENK AG in case of larger keyways.

The power transmission capability of the shaft-hub connection has to be verified by the purchaser.

For shaft-hub connections with interference fit, please advise the shrinkage allowance or the exact shaft dimensions.

## Misalignment

In practice, misalignments mostly occur in combined form. The angular misalignment $\Delta K_w$ of the coupling connection results from the parallel misalignment $\Delta K_r$ of the shafts.
An additional angular misalignment of the axis 1 (shaft) changes the angle $\Delta K_w$ relative to the axis 2 (coupling connection). Misalignments within the blue range do not cause an increase of the value $\Delta K_w$, whereas $\Delta K_w$ is increased if misalignments outside this range occur. The total misalignment capacity must not exceed $\Delta K_{w\ perm.}$. The permissible angular misalignment data is contained in the dimension tables relating to the individual coupling types.

Schematic depiction of misalignment

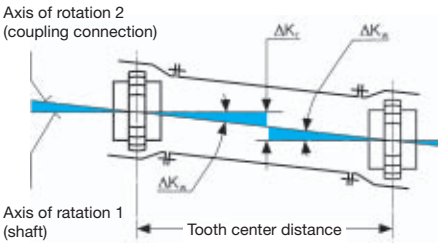


$\Delta K_r$ = parallel misalignment
$\Delta K_w$ = angular misalignment

1) Applies to angular misalignment continuously occurring during operation. The factor f can be interpolated for values in between.

**Table 2,** Speed factors

| Coupling type | | Speed factor f for angular misalignment $\Delta K_w$ 1) Values over 0.75° apply to type SB only | | | | | |
|---|---|---|---|---|---|---|---|
| **SB** Size | **SBk u. LBk** Size | 0.25° | 0.5° | 0.75° | 1° | 1.25° | 1.5° |
| **–** | **32** | 1 | 1 | 1 | – | – | – |
| **30** | **38** | 1 | 1 | 0.90 | 0.68 | 0.54 | 0.45 |
| **40** | **48** | 1 | 1 | 0.75 | 0.57 | 0.45 | 0.38 |
| **50** | **60** | 1 | 1 | 0.70 | 0.52 | 0.42 | 0.35 |
| **60** | **70** | 1 | 0.93 | 0.63 | 0.47 | 0.37 | 0.31 |
| **70** | **80** | 1 | 0.89 | 0.59 | 0.44 | 0.35 | 0.30 |
| **80** | **90** | 1 | 0.85 | 0.57 | 0.42 | 0.34 | 0.28 |
| **90** | **100** | 1 | 0.80 | 0.54 | 0.40 | 0.32 | 0.27 |
| **100** | **110** | 1 | 0.82 | 0.54 | 0.41 | 0.33 | 0.27 |
| **110** | **125** | 1 | 0.80 | 0.53 | 0.40 | 0.32 | 0.27 |
| **125** | **140** | 1 | 0.78 | 0.52 | 0.39 | 0.31 | 0.26 |
| **140** | **160** | 1 | 0.75 | 0.50 | 0.37 | 0.30 | 0.25 |
| **160** | **180** | 1 | 0.72 | 0.48 | 0.36 | 0.29 | 0.24 |
| **180** | **200** | 1 | 0.68 | 0.45 | 0.34 | 0.27 | 0.23 |
| **200** | **225** | 1 | 0.64 | 0.43 | 0.32 | 0.26 | 0.21 |
| **220** | **250** | 1 | 0.66 | 0.44 | 0.33 | 0.27 | 0.22 |
| **240** | **265** | 1 | 0.66 | 0.44 | 0.33 | 0.27 | 0.22 |
| **260** | **280** | 1 | 0.65 | 0.43 | 0.33 | 0.27 | 0.22 |
| **280** | **315** | 1 | 0.62 | 0.43 | 0.31 | 0.25 | 0.21 |
| **300** | **335** | 1 | 0.63 | 0.42 | 0.31 | 0.25 | 0.21 |
| **320** | **355** | 1 | 0.63 | 0.41 | 0.31 | 0.25 | 0.21 |
| **340** | **375** | 1 | 0.60 | 0.40 | 0.30 | 0.24 | 0.20 |
| **360** | **400** | 1 | 1 | 0.67 | 0.51 | 0.40 | 0.34 |
| **380** | **425** | 1 | 1 | 0.67 | 0.50 | 0.40 | 0.34 |
| **400** | **450** | 1 | 1 | 0.67 | 0.50 | 0.40 | 0.33 |

Subject to change due to technical improvement.

**Speed factors**
The maximum permissible operating speed $n_{perm}$ depends on the type and size of the coupling and on the misalignment occurring during operation. It is determined by using the following formula:
$n_{perm.} = n_{max.} \cdot f$

$n_{max.}$ acc. to dimension table
speed factor per Table 2.

The angular misalignment $\Delta K_w$ continuously occurring during operation is the decisive factor to determine the speed factor. The angular misalignment resulting from the parallel misalignment $\Delta K_r$ is obtained by linear calculation from the values listed in the dimension tables.

The following equation applies: $\Delta K_w = \frac{\Delta K_{w\ perm.}}{\Delta K_{r\ max.}} \cdot \Delta K_{r\ act.}$

$\Delta K_{w\ perm.}$ = permissible angular misalignment (deg., decimal value)

$\Delta K_{r\ max.}$ = max. static parallel misalignment (mm)

$\Delta K_{r\ actual}$ = parallel misalignment during operation (mm)

**Selection example:**
Required: Coupling between electric motor and centrifugal pump
Known: $P_N$ = 380 kW pump power
electric motor size: 400 L
n = 1490 rpm
shaft diameter pump d = 60 mm
shaft diameter motor d = 100 mm
service factor $K_1$ = 1.25 (centrifugal pump for light liquids)
To allow removal of the stuffing boxes, a larger distance is required between the motor and pump. For this reason, a spacer coupling needs to be used.
The dimension L is to be 280 mm.
Oil lubrication is specified.

Size determination

$$\frac{P_N}{n} \cdot K_1 = \frac{380}{1490} \cdot 1.25 = 0.319$$

According to dimension table 243129, the result is: Coupling SBL 60 with $\frac{P_{KN}}{n} = 0.50$

Check of bore diameter
Bore $d_1;d_{2\ max.}$= 70 mm
The motor shaft, however, requires a bore diameter of 100 mm.

Therefore, the coupling SBL 90 with bore
$d_1;d_{2\ max.}$= 100 mm, and a spacer length of L = 280 mm is selected.
The requirement L > 120 mm, acc. to the table on page 40, is hence also fulfilled.
A speed factor does not have to be considered, because higher misalignments do not occur during operation.

# Curved Tooth Couplings

## Construction Series SB

Dimension Table No. 243 125/1 Page 1

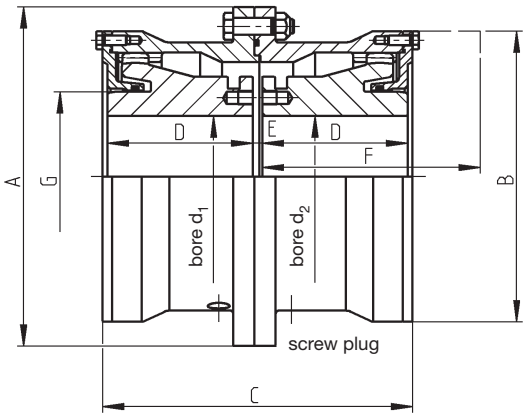


For coupling selection, please see page 6.

The dismounting dimension F is required to allow vertical installation and removal of the machines and O-ring replacement.

**Sizes 30 to 200 available from stock. Other sizes available on request.**

For torsional stiffness values, please see the data tables for SB-type couplings.

1) Based on a permissible angular misalignment of $\Delta K_{w\ perm.} = 1.5°$ per coupling half.
Higher misalignment capacity is possible, but requires special measures.

2) Values for the complete coupling with bore $d_1$; $d_{2\ max.}$

3) The maximum speed capacity depends on the misalignment. Please see table 'Speed Factors'.

| Type SB Size | Norm. cont. duty $\frac{P_{KN}}{n}$ kW·min | Speed 3) $n_{max.}$ rpm | Dimensions Bore $d_1;d_2$ pre mm | min mm | max mm | A mm | B mm | C mm | D mm | E mm | F mm | G mm | Max. static 1) radial misalignment $\Delta K_{max.}$ mm | Total grease quantity kg | Total oil quantity litres | Mass 2) moment of inertia J kgm² | Weight 2) kg |
|---|---|---|---|---|---|---|---|---|---|---|---|---|---|---|---|---|---|
| **30** | 0.082 | 7500 | 10 | 12 | 32 | 118 | 92 | 108 | 50 | 5 | 75 | 45 | ±1.95 | 0.09 | 0.03 | 0.006 | 4.4 |
| **40** | 0.146 | 6900 | 20 | 22 | 46 | 145 | 115 | 128 | 60 | 5 | 90 | 60 | ±2.70 | 0.09 | 0.04 | 0.017 | 7.5 |
| **50** | 0.288 | 6300 | 20 | 22 | 58 | 165 | 135 | 148 | 70 | 5 | 110 | 75 | ±3.00 | 0.17 | 0.07 | 0.033 | 11.2 |
| **60** | 0.50 | 5900 | 26 | 28 | 70 | 200 | 160 | 172 | 80 | 6 | 120 | 90 | ±3.45 | 0.25 | 0.11 | 0.082 | 18.4 |
| **70** | 0.82 | 5400 | 26 | 28 | 78 | 220 | 178 | 192 | 90 | 6 | 130 | 100 | ±3.90 | 0.35 | 0.15 | 0.133 | 26 |
| **80** | 1.14 | 5000 | 30 | 32 | 92 | 240 | 196 | 212 | 100 | 6 | 150 | 120 | ±4.35 | 0.40 | 0.20 | 0.200 | 32 |
| **90** | 1.64 | 4700 | 30 | 32 | 100 | 270 | 225 | 236 | 110 | 8 | 170 | 130 | ±4.80 | 0.60 | 0.30 | 0.38 | 47 |
| **100** | 2.30 | 4300 | 53 | 55 | 110 | 280 | 240 | 256 | 120 | 8 | 180 | 140 | ±5.25 | 0.75 | 0.35 | 0.49 | 54 |
| **110** | 2.88 | 4000 | 63 | 65 | 120 | 310 | 265 | 276 | 130 | 8 | 190 | 155 | ±5.70 | 1.00 | 0.45 | 0.82 | 72 |
| **125** | 4.60 | 3700 | 73 | 75 | 138 | 340 | 295 | 320 | 150 | 10 | 215 | 175 | ±6.45 | 1.3 | 0.65 | 1.35 | 100 |
| **140** | 6.48 | 3400 | 83 | 85 | 156 | 390 | 325 | 350 | 165 | 10 | 230 | 200 | ±7.20 | 1.6 | 0.85 | 2.41 | 142 |
| **160** | 9.24 | 3100 | 118 | 120 | 180 | 435 | 370 | 404 | 190 | 12 | 270 | 230 | ±8.40 | 2.6 | 1.4 | 4.3 | 199 |
| **180** | 12.92 | 2900 | 138 | 140 | 200 | 480 | 415 | 456 | 220 | 12 | 300 | 260 | ±9.60 | 3.3 | 1.8 | 7.5 | 285 |
| **200** | 18.4 | 2700 | 158 | 160 | 225 | 545 | 465 | 512 | 245 | 14 | 340 | 290 | ±10.80 | 4.8 | 2.5 | 14.1 | 420 |
| **220** | 25.6 | 2400 | 158 | 160 | 250 | 580 | 510 | 556 | 270 | 16 | 360 | 355 | ±12.00 | 5 | 2.5 | 19.7 | 514 |
| **240** | 32.8 | 2200 | 178 | 180 | 275 | 645 | 560 | 598 | 290 | 18 | 380 | 390 | ±12.80 | 7 | 3.5 | 29.9 | 657 |
| **260** | 41.0 | 2100 | 198 | 200 | 295 | 680 | 595 | 640 | 310 | 20 | 400 | 415 | ±13.50 | 8 | 4 | 42.3 | 797 |
| **280** | 51.4 | 2000 | 218 | 220 | 325 | 745 | 660 | 702 | 340 | 22 | 440 | 460 | ±14.25 | 10 | 6 | 69 | 1065 |
| **300** | 64.8 | 1900 | 238 | 240 | 340 | 775 | 675 | 744 | 360 | 24 | 470 | 480 | ±15.00 | 11 | 8 | 84 | 1220 |
| **320** | 82.0 | 1800 | 258 | 260 | 375 | 825 | 725 | 786 | 380 | 26 | 500 | 525 | ±16.50 | 13 | 9 | 119 | 1470 |
| **340** | 98.6 | 1700 | 278 | 280 | 400 | 915 | 795 | 808 | 390 | 28 | 520 | 560 | ±16.50 | 20 | 11 | 184 | 1870 |
| **360** | 118.3 | 950 | 297 | 300 | 420 | 960 | 840 | 830 | 400 | 30 | 540 | 590 | ±16.50 | 26 | 12 | 244 | 2245 |
| **380** | 138.0 | 900 | 317 | 320 | 445 | 1010 | 890 | 870 | 420 | 30 | 560 | 625 | ±18.00 | 29 | 13 | 345 | 2610 |
| **400** | 165.1 | 875 | 337 | 340 | 460 | 1050 | 925 | 890 | 430 | 30 | 580 | 650 | ±18.00 | 32 | 15 | 368 | 2780 |

Subject to change due to technical improvement.


RENK Aktiengesellschaft, Rheine Works · Phone: +49 5971 790 0 · Fax: +49 5971 790 208 and 790 256

# Curved Tooth Couplings

## Construction Series SB

Dimension Table No. 243 125/1 Page 2

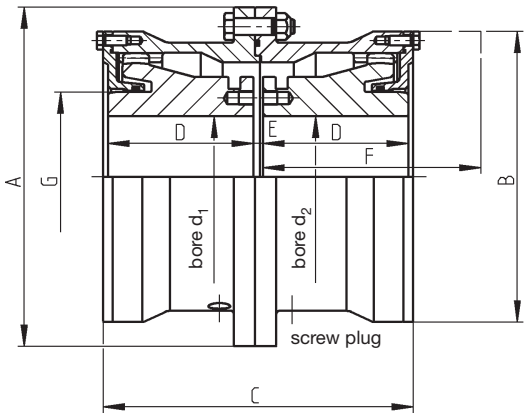


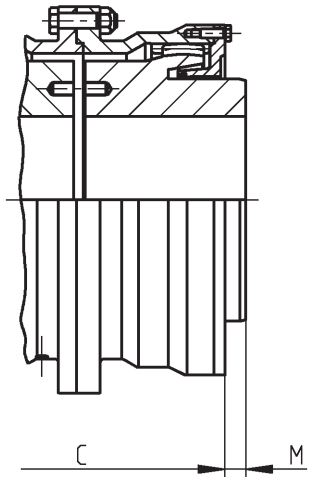


For coupling selection, please see page 6.

The dismounting dimension F is required to allow vertical installation and removal of the machines and O-ring replacement.

**Other sizes available on request.**

For torsional stiffness values, please see the data tables for SB-type couplings.

1) Based on a permissible angular misalignment of $\Delta K_{w\ perm.} = 1.5°$ per coupling half.

Higher misalignment capacity is possible, but requires special measures.

2) Values for the complete coupling with bore $d_1$; $d_{2\ max.}$

3) The maximum speed capacity depends on the misalignment. Please see table 'Speed Factors'.

| Type SB Size | Norm. cont. duty $\frac{P_{KN}}{n}$ kW·min | Speed 3) $n_{max.}$ rpm | Dimensions bore $d_1;d_2$ pre mm | min mm | max mm | A mm | B mm | C mm | D mm | E mm | F mm | G mm | M mm | Max. static 1) radial misalignment $\Delta K_{max.}$ mm | Total grease quantity kg | Total oil quantity litres | Mass 2) moment of inertia J kgm² | Weight 2) kg |
|---|---|---|---|---|---|---|---|---|---|---|---|---|---|---|---|---|---|---|
| **420** | 184.8 | 850 | 357 | 360 | 485 | 1120 | 970 | 930 | 450 | 30 | 610 | 690 | – | ±18.00 | 34 | 16 | 486 | 3324 |
| **440** | 220.8 | 825 | 377 | 380 | 505 | 1160 | 990 | 950 | 460 | 30 | 630 | 715 | – | ±18.00 | 37 | 18 | 658 | 3502 |
| **460** | 247.2 | 800 | 397 | 400 | 535 | 1210 | 1060 | 958 | 480 | 30 | 650 | 760 | 16 | ±19.50 | 45 | 19 | 768 | 4058 |
| **480** | 276.0 | 770 | 417 | 420 | 555 | 1250 | 1080 | 968 | 500 | 40 | 680 | 790 | 36 | ±19.50 | 47 | 21 | 870 | 4421 |
| **500** | 307.2 | 750 | 437 | 440 | 600 | 1310 | 1170 | 1005 | 525 | 40 | 710 | 852 | 42.5 | ±19.50 | 48 | 23 | 1071 | 5088 |
| **525** | 345.6 | 725 | 457 | 460 | 605 | 1340 | 1200 | 1030 | 550 | 40 | 760 | 860 | 55 | ±19.50 | 50 | 26 | 1276 | 5487 |
| **550** | 393.6 | 700 | 477 | 480 | 640 | 1390 | 1240 | 1050 | 580 | 40 | 800 | 910 | 75 | ±19.50 | 59 | 29 | 1649 | 6284 |
| **575** | 444.0 | 675 | 497 | 500 | 670 | 1460 | 1325 | 1250 | 600 | 50 | 820 | 950 | 95 | ±19.50 | 60 | 32 | 1920 | 7325 |
| **600** | 523.2 | 650 | 522 | 525 | 700 | 1490 | 1360 | 1310 | 630 | 50 | 860 | 990 | 125 | ±19.50 | 64 | 35 | 2120 | 7740 |
| **625** | 616.8 | 625 | 547 | 550 | 730 | 1550 | 1385 | 1350 | 650 | 50 | 890 | 1030 | 145 | ±18.00 | 66 | 38 | 2493 | 8380 |
| **650** | 688.8 | 600 | 572 | 575 | 755 | 1660 | 1510 | 1410 | 680 | 50 | 920 | 1070 | 175 | ±18.00 | 68 | 42 | 3147 | 9863 |
| **675** | 775.2 | 575 | 597 | 600 | 790 | 1710 | 1545 | 1450 | 700 | 50 | 940 | 1120 | 195 | ±18.00 | 84 | 46 | 3696 | 10546 |
| **700** | 873.6 | 550 | 622 | 625 | 820 | 1760 | 1620 | 1510 | 730 | 50 | 970 | 1160 | 225 | ±18.00 | 105 | 50 | 5036 | 12058 |

Subject to change due to technical improvement.

# Curved Tooth Couplings

## Construction Series SBk

Dimension Table No. 243 126/1 Page 1

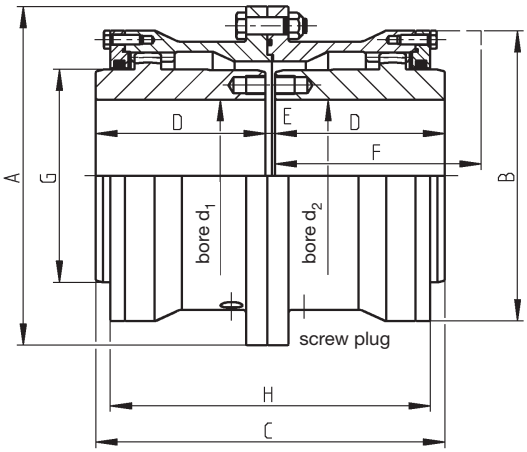


Hub configuration II

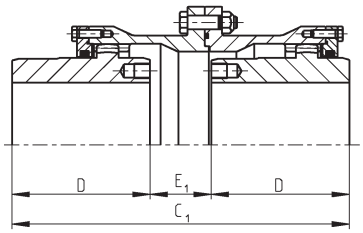


Hub configuration III

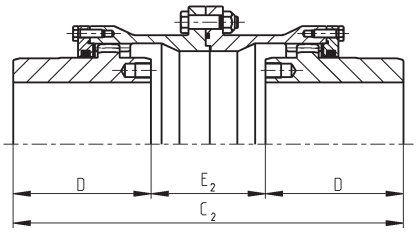


For coupling selection, please see page 6.

The dismounting dimension F is required to allow vertical installation and removal of the machines and O-ring replacement.

**Sizes 38 to 225 available from stock. Other sizes available on request.**

For torsional stiffness values, please see the data tables for SBk-type couplings.

1) Based on a permissible angular misalignment of $\Delta K_{w\ perm.} = 0.75°$ per coupling half.

Higher misalignment capacity is possible, but requires special measures.

2) Values for the complete coupling with bore $d_1$; $d_{2\ max.}$

3) The maximum speed capacity depends on the misalignment. Please see table 'Speed Factors'.

| Type SBk Size | Norm. cont. duty $P_{KN}/n$ kW·min | Speed 3) $n_{max.}$ rpm | Dimensions bore $d_1;d_2$ min mm | max mm | A mm | B mm | C mm | $C_1$ mm | $C_2$ mm | D mm | E mm | $E_1$ mm | $E_2$ mm | F mm | G mm | H mm | Max. static 1) radial misalignment $\Delta K_{max.}$ mm | Total grease quantity kg | Mass 2) moment of inertia J $kgm^2$ | Weight 2) kg |
|---|---|---|---|---|---|---|---|---|---|---|---|---|---|---|---|---|---|---|---|---|
| **38** | 0.082 | 7500 | 12 | 42 | 118 | 92 | 125 | 137 | 149 | 60 | 5 | 17 | 29 | 90 | 60 | 115 | ±1.01 | 0.09 | 0.007 | 4.6 |
| **48** | 0.146 | 6900 | 22 | 55 | 145 | 115 | 145 | 166 | 187 | 70 | 5 | 26 | 47 | 100 | 77 | 135 | ±1.26 | 0.09 | 0.018 | 8.1 |
| **60** | 0.288 | 6300 | 22 | 65 | 165 | 135 | 166 | 193 | 220 | 80 | 6 | 33 | 60 | 110 | 90 | 155 | ±1.50 | 0.17 | 0.036 | 11.9 |
| **70** | 0.50 | 5900 | 28 | 80 | 200 | 160 | 186 | 222 | 258 | 90 | 6 | 42 | 78 | 120 | 112.5 | 178 | ±1.73 | 0.25 | 0.087 | 20 |
| **80** | 0.82 | 5400 | 28 | 92 | 220 | 178 | 206 | 248 | 290 | 100 | 6 | 48 | 90 | 130 | 128 | 198 | ±1.95 | 0.35 | 0.146 | 27 |
| **90** | 1.14 | 5000 | 32 | 105 | 240 | 196 | 228 | 276 | 324 | 110 | 8 | 56 | 104 | 140 | 145 | 218 | ±2.25 | 0.40 | 0.22 | 33 |
| **100** | 1.64 | 4700 | 32 | 115 | 270 | 225 | 258 | 309 | 360 | 125 | 8 | 59 | 110 | 150 | 160.5 | 244 | ±2.40 | 0.60 | 0.42 | 50 |
| **110** | 2.30 | 4300 | 55 | 126 | 280 | 240 | 288 | 342 | 396 | 140 | 8 | 62 | 116 | 170 | 176 | 264 | ±2.70 | 0.75 | 0.55 | 59 |
| **125** | 2.88 | 4000 | 65 | 145 | 310 | 265 | 310 | 368 | 426 | 150 | 10 | 68 | 126 | 180 | 200.5 | 284 | ±2.85 | 1.00 | 0.91 | 78 |
| **140** | 4.60 | 3700 | 75 | 162 | 340 | 295 | 350 | 420 | 490 | 170 | 10 | 80 | 150 | 200 | 224.5 | 330 | ±3.30 | 1.3 | 1.58 | 111 |
| **160** | 6.48 | 3400 | 85 | 185 | 390 | 325 | 392 | 464 | 536 | 190 | 12 | 84 | 156 | 230 | 256.5 | 360 | ±3.60 | 1.6 | 2.78 | 154 |
| **180** | 9.24 | 3100 | 120 | 210 | 435 | 370 | 452 | 540 | 628 | 220 | 12 | 100 | 188 | 260 | 288.5 | 416 | ±4.20 | 2.6 | 4.96 | 218 |
| **200** | 12.92 | 2900 | 140 | 230 | 480 | 415 | 514 | 616 | 718 | 250 | 14 | 116 | 218 | 300 | 320.5 | 476 | ±4.80 | 3.3 | 8.4 | 305 |
| **225** | 18.4 | 2700 | 160 | 260 | 545 | 465 | 576 | 688 | 800 | 280 | 16 | 128 | 240 | 330 | 362 | 532 | ±5.40 | 4.8 | 15.6 | 445 |
| **250** | 25.6 | 2400 | 160 | 280 | 580 | 510 | 620 | 752 | 884 | 300 | 20 | 152 | 284 | 350 | 400 | 556 | ±6.00 | 5 | 21.8 | 550 |
| **265** | 32.8 | 2200 | 180 | 310 | 645 | 560 | 680 | 815 | 948 | 330 | 20 | 154 | 288 | 380 | 440 | 600 | ±6.30 | 7 | 34.0 | 735 |
| **280** | 41.0 | 2100 | 200 | 325 | 680 | 595 | 680 | 854 | 1028 | 330 | 20 | 194 | 368 | 380 | 460 | 640 | ±6.75 | 8 | 45.5 | 850 |
| **315** | 51.4 | 2000 | 220 | 360 | 745 | 660 | 740 | 926 | 1112 | 360 | 20 | 206 | 392 | 420 | 510 | 702 | ±6.75 | 10 | 71 | 1060 |
| **335** | 64.8 | 1900 | 240 | 380 | 775 | 675 | 780 | 981 | 1182 | 380 | 20 | 221 | 422 | 440 | 535 | 744 | ±7.50 | 11 | 88 | 1275 |
| **355** | 82.0 | 1800 | 260 | 410 | 825 | 725 | 825 | 1034 | 1243 | 400 | 25 | 234 | 443 | 460 | 580 | 786 | ±8.25 | 13 | 127 | 1530 |
| **375** | 98.6 | 1700 | 280 | 440 | 915 | 795 | 865 | 1061 | 1257 | 420 | 25 | 221 | 417 | 480 | 620 | 808 | ±8.25 | 20 | 192 | 1920 |
| **400** | 118.3 | 950 | 330 | 470 | 960 | 840 | 905 | 1094 | 1283 | 440 | 25 | 214 | 403 | 500 | 665 | 830 | ±8.25 | 26 | 242 | 2200 |
| **425** | 138.0 | 900 | 355 | 500 | 1010 | 890 | 945 | 1145 | 1345 | 460 | 25 | 225 | 425 | 520 | 710 | 870 | ±9.00 | 29 | 330 | 2640 |
| **450** | 165.1 | 875 | 370 | 520 | 1050 | 925 | 990 | 1180 | 1370 | 480 | 30 | 220 | 410 | 550 | 730 | 890 | ±9.00 | 32 | 389 | 3035 |

Subject to change due to technical improvement.


RENK Aktiengesellschaft, Rheine Works · Phone: +49 5971 790 0 · Fax: +49 5971 790 208 and 790 256

# Curved Tooth Couplings

## Construction Series SBk

Dimension Table No. 243 126/1 Page 2

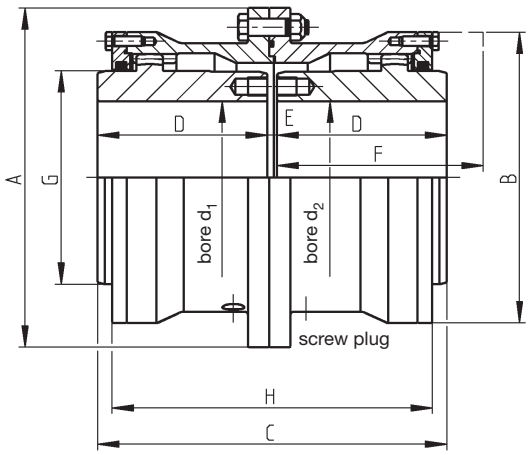


Hub configuration II

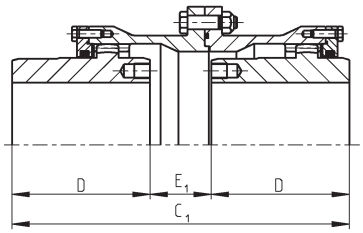


Hub configuration III

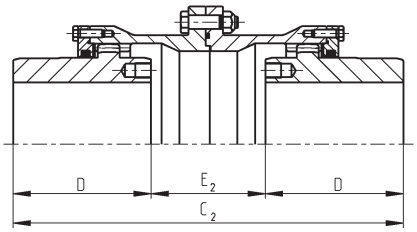


For coupling selection, please see size determination.

The dismounting dimension F is required to allow vertical installation and removal of the machines and O-ring replacement.

**Other sizes available on request.**

For torsional stiffness values, please see the data tables for SBk-type couplings.

1) Based on a permissible angular misalignment of $\Delta K_{w\ perm} = 0.75°$ per coupling half.

Higher misalignment capacity is possible, but requires special measures.

2) Values for the complete coupling with bore $d_1$; $d_{2\ max.}$

3) The maximum speed capacity depends on the misalignment. Please see table 'Speed Factors'.

| Type SBk Size | Norm. cont. duty $P_{KN}/n$ kW·min | Speed 3) $n_{max.}$ rpm | Dimensions bore $d_1;d_2$ min mm | max mm | A mm | B mm | C mm | $C_1$ mm | $C_2$ mm | D mm | E mm | $E_1$ mm | $E_2$ mm | F mm | G mm | H mm | Max. static 1) radial misalignment $\Delta K_{max.}$ mm | Total grease quantity kg | Mass 2) moment of inertia J kgm² | Weight 2) kg |
|---|---|---|---|---|---|---|---|---|---|---|---|---|---|---|---|---|---|---|---|---|
| **475** | 184.8 | 850 | 395 | 550 | 1120 | 970 | 1030 | 1215 | 1400 | 500 | 30 | 215 | 400 | 580 | 770 | 930 | ±6 | 34 | 529 | 3435 |
| **500** | 220.8 | 825 | 420 | 570 | 1160 | 990 | 1090 | 1254 | 1418 | 530 | 30 | 194 | 358 | 610 | 800 | 950 | ±6 | 37 | 604 | 3730 |
| **530** | 247.2 | 800 | 450 | 605 | 1210 | 1060 | 1150 | 1282 | 1414 | 560 | 30 | 162 | 294 | 640 | 850 | 958 | ±6.5 | 45 | 789 | 4436 |
| **560** | 276.0 | 770 | 470 | 635 | 1250 | 1080 | 1220 | 1381 | 1542 | 590 | 40 | 201 | 362 | 670 | 890 | 1034 | ±6.5 | 47 | 927 | 4858 |
| **600** | 345.6 | 725 | 510 | 685 | 1340 | 1200 | 1280 | 1372 | 1470 | 620 | 40 | 132 | 230 | 710 | 960 | 1034 | ±6.5 | 50 | 1371 | 6035 |
| **630** | 393.6 | 700 | 540 | 715 | 1390 | 1240 | 1340 | 1410 | 1480 | 650 | 40 | 110 | 180 | 750 | 1005 | 1050 | ±6.5 | 59 | 1639 | 6815 |
| **670** | 523.2 | 650 | 580 | 785 | 1490 | 1360 | 1400 | 1430 | 1460 | 680 | 40 | 70 | 100 | 790 | 1100 | 1060 | ±6.5 | 64 | 2364 | 8290 |
| **710** | 616.8 | 625 | 610 | 815 | 1550 | 1385 | 1470 | 1470 | 1470 | 710 | 50 | 50 | 50 | 820 | 1140 | 1060 | ±6 | 66 | 2749 | 8883 |
| **750** | 688.8 | 600 | 650 | 870 | 1660 | 1510 | 1550 | 1550 | 1550 | 750 | 50 | 50 | 50 | 860 | 1220 | 1060 | ±6 | 68 | 3798 | 10832 |
| **800** | 775.2 | 575 | 700 | 905 | 1710 | 1545 | 1650 | 1650 | 1650 | 800 | 50 | 50 | 50 | 910 | 1270 | 1060 | ±6 | 84 | 4223 | 12094 |
| **830** | 873.6 | 550 | 730 | 950 | 1760 | 1620 | 1710 | 1710 | 1710 | 830 | 50 | 50 | 50 | 940 | 1330 | 1060 | ±6 | 105 | 5403 | 13484 |

Subject to change due to technical improvement.

# Curved Tooth Couplings

## Construction Series LBk

Dimension Table No. 243 126/ 2

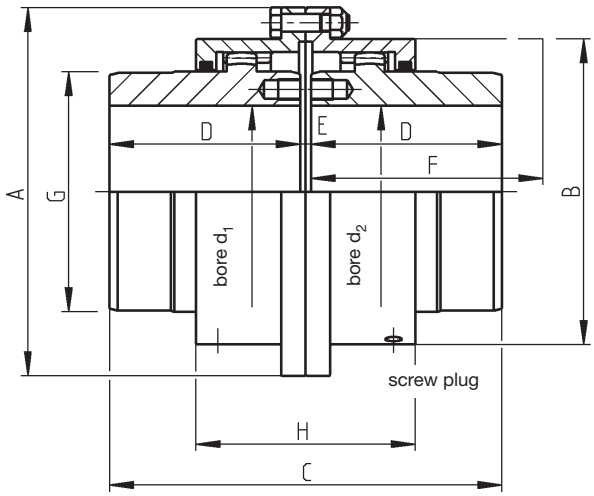


For coupling selection, please see page 6.

The dismounting dimension F is required to allow vertical installation and removal of the machines and O-ring replacement.

**Sizes 32 to 225 available from stock. Other sizes available on request.**

For torsional stiffness values, please see the data tables for LBk-type couplings.

1) Based on a permissible angular misalignment of $\Delta K_{w\ perm.} = 0.75°$ per coupling half.

Higher misalignment capability is possible, but requires special measures.

2) Values for the complete coupling with bore $d_1$; $d_{2\ max.}$

3) The maximum speed capacity depends on the misalignment. Please see table 'Speed Factors'.

| Type LBk Size | Norm. cont. duty $P_{KN}/n$ kW·min | Speed 3) $n_{max.}$ rpm | bore $d_1;d_2$ min mm | bore $d_1;d_2$ max mm | Dimensions A mm | B mm | C mm | D mm | E mm | F mm | G mm | H mm | Max. static 1) radial misalignment $\Delta K_{max.}$ mm | Total grease quantity kg | Mass 2) moment of inertia J $kgm^2$ | Weight 2) kg |
|---|---|---|---|---|---|---|---|---|---|---|---|---|---|---|---|---|
| **32** | 0.050 | 8500 | 12 | 35 | 105 | 74 | 104 | 50 | 4 | 80 | 48 | 90 | ±0.57 | 0.03 | 0.0034 | 2.9 |
| **38** | 0.082 | 7500 | 12 | 42 | 115 | 88 | 125 | 60 | 5 | 90 | 60 | 101 | ±0.69 | 0.04 | 0.0059 | 4.3 |
| **48** | 0.146 | 6900 | 22 | 55 | 145 | 108 | 145 | 70 | 5 | 100 | 77 | 102 | ±0.71 | 0.06 | 0.015 | 7.0 |
| **60** | 0.288 | 6300 | 22 | 65 | 165 | 125 | 166 | 80 | 6 | 110 | 90 | 107 | ±0.77 | 0.10 | 0.026 | 9.3 |
| **70** | 0.50 | 5900 | 28 | 80 | 195 | 146 | 186 | 90 | 6 | 120 | 112.5 | 112 | ±0.78 | 0.15 | 0.059 | 14.7 |
| **80** | 0.82 | 5400 | 28 | 92 | 215 | 168 | 206 | 100 | 6 | 130 | 128 | 119 | ±0.84 | 0.22 | 0.097 | 20.0 |
| **90** | 1.14 | 5000 | 32 | 105 | 230 | 185 | 228 | 110 | 8 | 140 | 145 | 127 | ±0.92 | 0.29 | 0.14 | 25.4 |
| **100** | 1.64 | 4700 | 32 | 115 | 265 | 210 | 258 | 125 | 8 | 150 | 160.5 | 148 | ±1.08 | 0.44 | 0.28 | 38.0 |
| **110** | 2.30 | 4300 | 55 | 126 | 270 | 224 | 288 | 140 | 8 | 170 | 176 | 161 | ±1.23 | 0.55 | 0.36 | 45.6 |
| **125** | 2.88 | 4000 | 65 | 145 | 305 | 245 | 310 | 150 | 10 | 180 | 200.5 | 175 | ±1.34 | 0.79 | 0.64 | 62 |
| **140** | 4.60 | 3700 | 75 | 162 | 330 | 270 | 350 | 170 | 10 | 200 | 224.5 | 197 | ±1.44 | 0.90 | 1.03 | 82 |
| **160** | 6.48 | 3400 | 85 | 185 | 375 | 305 | 392 | 190 | 12 | 230 | 256.5 | 221 | ±1.70 | 1.23 | 1.5 | 120 |
| **180** | 9.24 | 3100 | 120 | 210 | 425 | 348 | 452 | 220 | 12 | 260 | 288.5 | 250 | ±1.89 | 1.9 | 3.6 | 177 |
| **200** | 12.92 | 2900 | 140 | 230 | 470 | 392 | 514 | 250 | 14 | 300 | 320.5 | 272 | ±2.12 | 2.4 | 6.2 | 245 |
| **225** | 18.4 | 2700 | 160 | 260 | 535 | 437 | 576 | 280 | 16 | 330 | 362 | 315 | ±2.42 | 3.7 | 11.2 | 347 |

Subject to change due to technical improvement.


RENK Aktiengesellschaft, Rheine Works · Phone: +49 5971 790 0 · Fax: +49 5971 790 208 and 790 256

# Curved Tooth Couplings

## Construction Series SBR

Dimension Table No. 243 127

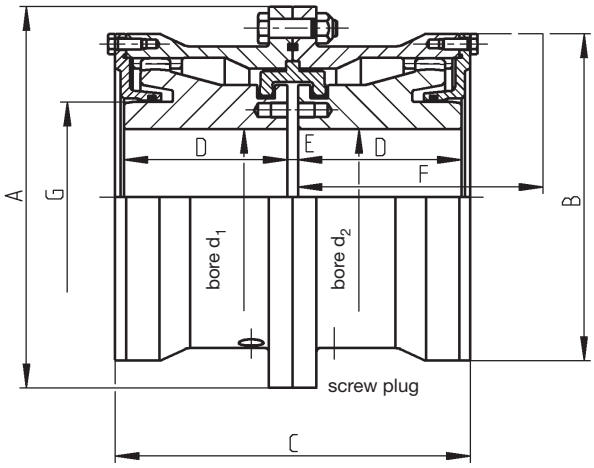


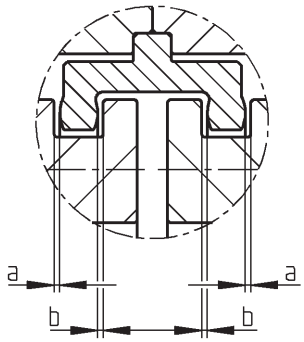


The construction series SBR is equipped with an U-shaped retaining ring for end float limitation. For these types, the permissible angular misalignment depends on the axial clearances a and b.

The maximum static parallel misalignment is to be calculated from the values of the comparable SB-types with the factor 0.4.

**Sizes 30 to 200 available from stock. Other sizes available on request.**

The dismounting dimension F is required for the vertical installation and removal of the machines as well as for mounting the retaining ring and the O-rings.

For torsional stiffness values, please see the data tables for SB-type couplings.

1) The permissible angular misalignment $\Delta K_{w\ perm.}$ is 0.6° per coupling half, based on the values stated in the list. The axial clearances a and b can be varied if the operation conditions require so.

2) Values for the complete coupling with bore $d_1$; $d_{2\ max.}$

3) The maximum speed capacity depends on the misalignment. Please see table 'Speed Factors'.

For coupling selection, please see page 6.

| Typ SBR Size | Norm. cont. duty $\frac{P_{KN}}{n}$ kW·min | Speed 3) $n_{max.}$ rpm | Dimensions bore $d_1;d_2$ pre mm | min mm | max mm | A mm | B mm | C mm | D mm | E mm | F mm | G mm | Axial clearances 1) a and b mm | Total grease quantity kg | Total oil quantity litres | Mass 2) moment of inertia J $kgm^2$ | Weight 2) kg |
|---|---|---|---|---|---|---|---|---|---|---|---|---|---|---|---|---|---|
| **30** | 0.082 | 7500 | 10 | 12 | 32 | 118 | 92 | 110 | 50 | 5 | 75 | 45 | 0.5 | 0.08 | 0.08 | 0.006 | 4.7 |
| **40** | 0.146 | 6900 | 20 | 22 | 46 | 145 | 115 | 131 | 60 | 5 | 90 | 60 | 0.5 | 0.16 | 0.16 | 0.017 | 7.8 |
| **50** | 0.288 | 6300 | 20 | 22 | 58 | 165 | 135 | 151 | 70 | 5 | 110 | 75 | 0.5 | 0.26 | 0.26 | 0.035 | 12.0 |
| **60** | 0.50 | 5900 | 26 | 28 | 70 | 200 | 160 | 175 | 80 | 6 | 120 | 90 | 0.5 | 0.43 | 0.43 | 0.085 | 19.4 |
| **70** | 0.82 | 5400 | 26 | 28 | 78 | 220 | 178 | 197 | 90 | 6 | 130 | 100 | 0.5 | 0.57 | 0.57 | 0.14 | 27.3 |
| **80** | 1.14 | 5000 | 30 | 32 | 92 | 240 | 196 | 217 | 100 | 6 | 150 | 120 | 0.5 | 0.74 | 0.74 | 0.21 | 33 |
| **90** | 1.64 | 4700 | 30 | 32 | 100 | 270 | 225 | 241 | 110 | 8 | 170 | 130 | 0.5 | 1.2 | 1.2 | 0.40 | 50 |
| **100** | 2.30 | 4300 | 53 | 55 | 110 | 280 | 240 | 261 | 120 | 8 | 180 | 140 | 1.0 | 1.4 | 1.4 | 0.52 | 57 |
| **110** | 2.88 | 4000 | 63 | 65 | 120 | 310 | 265 | 282 | 130 | 8 | 190 | 155 | 1.0 | 1.8 | 1.8 | 0.83 | 74 |
| **125** | 4.60 | 3700 | 73 | 75 | 138 | 340 | 295 | 325 | 150 | 10 | 215 | 175 | 1.0 | 2.4 | 2.4 | 1.41 | 105 |
| **140** | 6.48 | 3400 | 83 | 85 | 156 | 390 | 325 | 355 | 165 | 10 | 230 | 200 | 1.0 | 3.1 | 3.1 | 2.45 | 148 |
| **160** | 9.24 | 3100 | 118 | 120 | 180 | 435 | 370 | 410 | 190 | 12 | 270 | 230 | 1.0 | 4.5 | 4.5 | 4.51 | 209 |
| **180** | 12.92 | 2900 | 138 | 140 | 200 | 480 | 415 | 462 | 220 | 12 | 300 | 260 | 1.0 | 7.0 | 7.0 | 7.8 | 297 |
| **200** | 18.4 | 2700 | 158 | 160 | 225 | 545 | 465 | 519 | 245 | 14 | 340 | 290 | 1.0 | 10.7 | 10.7 | 14.6 | 428 |
| **220** | 25.6 | 2400 | 158 | 160 | 250 | 580 | 510 | 556 | 270 | 16 | 360 | 355 | 1.5 | 11.5 | 11.5 | 21.7 | 540 |
| **240** | 32.8 | 2200 | 178 | 180 | 275 | 645 | 560 | 598 | 290 | 18 | 380 | 390 | 1.5 | 12.5 | 12.5 | 32.5 | 682 |
| **260** | 41.0 | 2100 | 198 | 200 | 295 | 680 | 595 | 640 | 310 | 20 | 400 | 415 | 1.5 | 14 | 14 | 44.3 | 832 |
| **280** | 51.4 | 2000 | 218 | 220 | 325 | 745 | 660 | 702 | 340 | 22 | 440 | 460 | 1.5 | 17 | 17 | 73 | 1130 |
| **300** | 64.8 | 1900 | 238 | 240 | 340 | 775 | 675 | 744 | 360 | 24 | 470 | 480 | 1.5 | 20 | 20 | 88 | 1275 |
| **320** | 82.0 | 1800 | 258 | 260 | 375 | 825 | 725 | 786 | 380 | 26 | 500 | 525 | 1.5 | 24 | 24 | 124 | 1535 |
| **340** | 98.6 | 1700 | 278 | 280 | 400 | 915 | 795 | 808 | 390 | 28 | 520 | 560 | 1.5 | 28 | 28 | 185 | 1900 |

Subject to change due to technical improvement.

# Curved Tooth Couplings

## Construction Series SBRk

Dimension Table No. 243 128/ 1

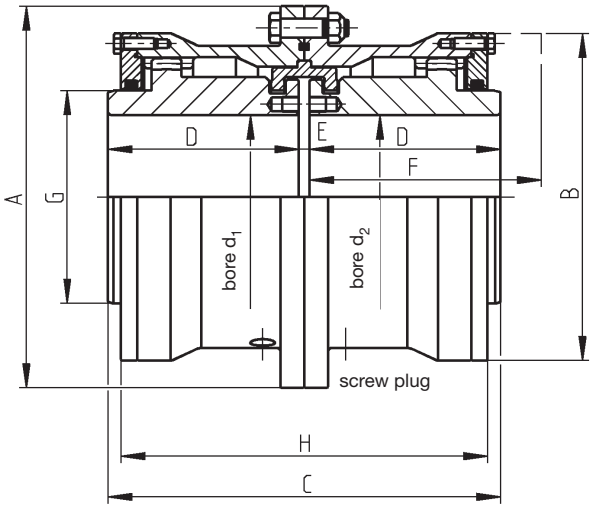


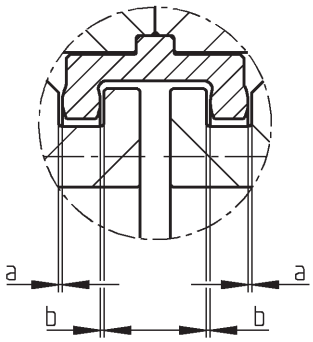


The construction series SBRk is equipped with a U-shaped retaining ring for end float limitation. For these types, the permissible angular misalignment depends on the axial clearances a and b.

For coupling selection, please see page 6.

The dismounting dimension F is required for the vertical installation and removal of the machines as well as for mounting the retaining ring and the O-rings.

**Other sizes available on request.**

The maximum static parallel misalignment is to be calculated from the values of the comparable SBk-types with the factor 0.8.

For torsional stiffness values, please see the data tables for SB-type couplings.

1) The permissible angular misalignment $\Delta K_{w\ perm.}$ is 0.6° per coupling half, based on the values stated in the list. The axial clearances a and b can be varied if the operation conditions require so.

2) Values for the complete coupling with bore $d_1$;$_{d2\ max.}$

3) The maximum speed capacity depends on the misalignment. Please see table 'Speed Factors'.

| Type SBRk Size | Norm. cont. duty $\frac{P_{KN}}{n}$ kW·min | Speed 3) $n_{max.}$ rpm | Dimensions bore $d_1$;$d_2$ min mm | max mm | A mm | B mm | C mm | D mm | E mm | F mm | G mm | H mm | Axial clearances 1) a and b mm | Total grease quantity kg | Mass 2) moment of inertia J kgm² | Weight 2) kg |
|---|---|---|---|---|---|---|---|---|---|---|---|---|---|---|---|---|
| **38** | 0.082 | 7500 | 12 | 40 | 118 | 92 | 125 | 60 | 5 | 90 | 52 | 117 | 0.5 | 0.07 | 0.008 | 5.1 |
| **48** | 0.146 | 6900 | 22 | 50 | 145 | 115 | 145 | 70 | 5 | 100 | 71 | 138 | 0.5 | 0.14 | 0.022 | 9.0 |
| **60** | 0.288 | 6300 | 22 | 63 | 165 | 135 | 166 | 80 | 6 | 110 | 83 | 158 | 0.5 | 0.21 | 0.041 | 12.8 |
| **70** | 0.50 | 5900 | 28 | 75 | 200 | 160 | 186 | 90 | 6 | 120 | 103 | 181 | 0.5 | 0.28 | 0.10 | 22 |
| **80** | 0.82 | 5400 | 28 | 85 | 220 | 178 | 206 | 100 | 6 | 130 | 116 | 203 | 0.5 | 0.44 | 0.16 | 29 |
| **90** | 1.14 | 5000 | 32 | 95 | 240 | 196 | 228 | 110 | 8 | 140 | 133 | 223 | 0.5 | 0.60 | 0.25 | 37 |
| **100** | 1.64 | 4700 | 32 | 105 | 270 | 225 | 258 | 125 | 8 | 150 | 142 | 249 | 0.5 | 0.90 | 0.49 | 55 |
| **110** | 2.30 | 4300 | 55 | 115 | 280 | 240 | 288 | 140 | 8 | 170 | 156 | 269 | 1.0 | 1.0 | 0.65 | 65 |
| **125** | 2.88 | 4000 | 65 | 130 | 310 | 265 | 310 | 150 | 10 | 180 | 177 | 290 | 1.0 | 1.1 | 1.10 | 86 |
| **140** | 4.60 | 3700 | 75 | 150 | 340 | 295 | 350 | 170 | 10 | 200 | 200 | 335 | 1.0 | 1.4 | 1.83 | 119 |
| **160** | 6.48 | 3400 | 85 | 170 | 390 | 325 | 392 | 190 | 12 | 230 | 230 | 365 | 1.0 | 1.7 | 3.12 | 167 |
| **180** | 9.24 | 3100 | 120 | 190 | 435 | 370 | 452 | 220 | 12 | 260 | 261 | 422 | 1.0 | 2.8 | 5.75 | 243 |
| **200** | 12.92 | 2900 | 140 | 210 | 480 | 415 | 514 | 250 | 14 | 300 | 296 | 482 | 1.0 | 4.6 | 9.6 | 337 |
| **225** | 18.4 | 2700 | 160 | 240 | 545 | 465 | 576 | 280 | 16 | 330 | 338 | 539 | 1.0 | 7.1 | 17.8 | 475 |

Subject to change due to technical improvement.


RENK Aktiengesellschaft, Rheine Works · Phone: +49 5971 790 0 · Fax: +49 5971 790 208 and 790 256

# Curved Tooth Couplings

## Construction Series LBRkn

Dimension Table No. 243 351

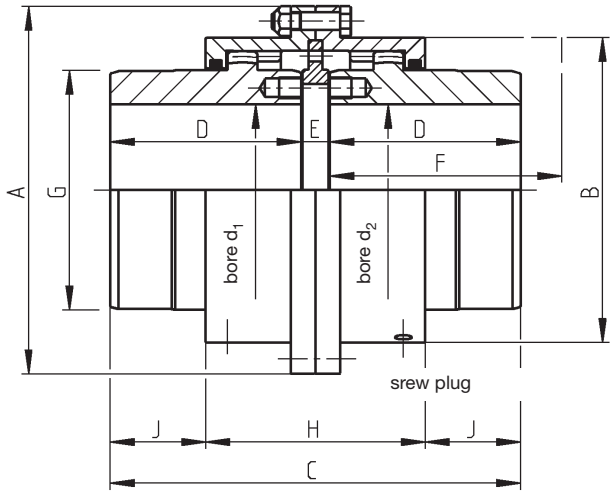


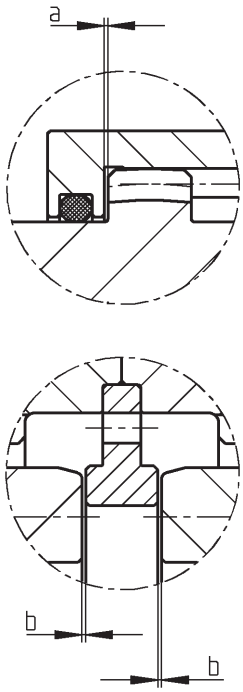


The construction series LBRkn is equipped with a retaining plate for end float limitation. For these types, the permissible angular misalignment depends on the axial clearances a and b.

For coupling selection,
please see page 6.

The dismounting dimension F is required to allow vertical installation and removal of the machines and O-ring replacement.

**Other sizes available on request.**

For torsional stiffness values, please see the data tables for LBk-type couplings.

The maximum static parallel misalignment is to be calculated from the values of the comparable LBk-types with the factor 0.8.

1) The permissible angular misalignment $\Delta K_{w\ perm.}$ is 0.6° per coupling half, based on the values stated in the list.

The axial clearances a and b can be varied if the operation conditions require so.

2) Values for the complete coupling with bore $d_1;d_{2\ max.}$

3) The maximum speed capacity depends on the misalignment. Please see table 'Speed Factors'.

| Type LBRkn | Norm. cont. duty | Speed 3) | bore $d_1;d_2$ | | Dimensions | | | | | | | | | Axial clearances 1) a and b | Total grease quantity | Mass 2) moment of inertia J | Weight 2) |
|---|---|---|---|---|---|---|---|---|---|---|---|---|---|---|---|---|---|
| Size | $\frac{P_{KN}}{n}$ | $n_{max.}$ | min | max | A | B | C | D | E | F | G | H | J | | | | |
| | kW·min | rpm | mm | mm | mm | mm | mm | mm | mm | mm | mm | mm | mm | mm | kg | kgm² | kg |
| **32** | 0.050 | 8500 | 12 | 35 | 105 | 74 | 113 | 50 | 13 | 80 | 48 | 90 | 11.5 | 0.5 | 0.03 | 0.004 | 3.1 |
| **38** | 0.082 | 7500 | 12 | 42 | 115 | 88 | 134 | 60 | 14 | 90 | 60 | 101 | 16.5 | 0.5 | 0.04 | 0.006 | 4.5 |
| **48** | 0.146 | 6900 | 22 | 55 | 145 | 108 | 154 | 70 | 14 | 100 | 77 | 102 | 26.0 | 0.5 | 0.06 | 0.016 | 7.3 |
| **60** | 0.288 | 6300 | 22 | 65 | 165 | 125 | 177 | 80 | 17 | 110 | 90 | 107 | 35.0 | 0.5 | 0.10 | 0.027 | 9.8 |
| **70** | 0.50 | 5900 | 28 | 80 | 195 | 146 | 197 | 90 | 17 | 120 | 112 | 112 | 42.5 | 0.5 | 0.15 | 0.062 | 15.4 |
| **80** | 0.82 | 5400 | 28 | 92 | 215 | 168 | 218 | 100 | 18 | 130 | 128 | 119 | 49.5 | 0.5 | 0.22 | 0.102 | 21.0 |
| **90** | 1.14 | 5000 | 32 | 105 | 230 | 185 | 240 | 110 | 20 | 140 | 145 | 127 | 56.5 | 0.5 | 0.29 | 0.15 | 26.5 |
| **100** | 1.64 | 4700 | 32 | 115 | 265 | 210 | 271 | 125 | 21 | 150 | 160 | 148 | 61.5 | 0.5 | 0.44 | 0.29 | 39.8 |
| **110** | 2.30 | 4300 | 55 | 126 | 270 | 224 | 301 | 140 | 21 | 170 | 176 | 161 | 70.0 | 1.0 | 0.55 | 0.38 | 47.5 |
| **125** | 2.88 | 4000 | 65 | 145 | 305 | 245 | 325 | 150 | 25 | 180 | 200 | 175 | 75.0 | 1.0 | 0.79 | 0.66 | 64.4 |
| **140** | 4.60 | 3700 | 75 | 162 | 330 | 270 | 367 | 170 | 27 | 200 | 224 | 197 | 85.0 | 1.0 | 0.90 | 1.07 | 85.0 |
| **160** | 6.48 | 3400 | 85 | 185 | 375 | 305 | 409 | 190 | 29 | 230 | 256 | 221 | 94.0 | 1.0 | 1.23 | 1.57 | 124.0 |
| **180** | 9.24 | 3100 | 120 | 210 | 425 | 348 | 474 | 220 | 34 | 260 | 288 | 250 | 112.0 | 1.0 | 1.90 | 3.72 | 183.0 |
| **200** | 12.92 | 2900 | 140 | 230 | 470 | 392 | 536 | 250 | 36 | 300 | 320 | 272 | 132.0 | 1.0 | 2.40 | 6.39 | 252.0 |
| **225** | 18.4 | 2700 | 160 | 260 | 535 | 437 | 599 | 280 | 39 | 330 | 362 | 315 | 142.0 | 1.0 | 3.70 | 11.5 | 357.0 |

Subject to change due to technical improvement.

# Curved Tooth Couplings

## Construction Series SBL

Dimension Table No. 243 129

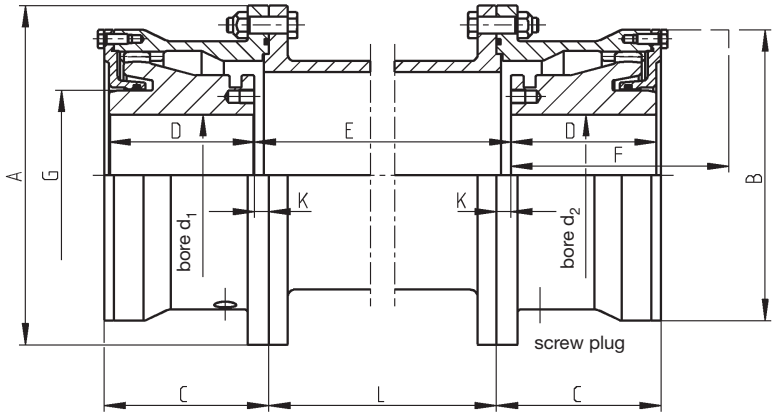


The dismounting dimension F is required to allow vertical installation and removal of the machines.

Torsional stiffness values, mass moments of inertia for couplings with spacer, and weight details are contained in the data table for SB-type couplings.

**Sizes 30 to 200 are available from stock, without spacer.**
**Other sizes available on request.**

The maximum permissible static parallel misalignment depends on the permissible angular misalignment and on the length of the spacer. The permissible angular misalignment for SB-type couplings is $\Delta K_{w\ perm.} = 1.5°$ per coupling half.

Higher misalignment capacity is possible, but requires special measures.

1) The speed $n_{max}$ depends on the length and weight of the spacer.

The maximum speed capacity is determined by the misalignment. Please see the table 'Speed Factors'.

2) Values for the complete coupling without spacer, with bore $d_1$,$d_{2max.}$

For coupling selection, please see page 6.

| Type SBL Size | Norm. cont. duty $P_{KN}/n$ kW·min | Speed 1) $n_{max.}$ min⁻¹ | Dimensions bore $d_1$;$d_2$ pre mm | min mm | max mm | A mm | B mm | C mm | D mm | F mm | G mm | K mm | L mm | Total grease 2) quantity kg | Total oil 2) quantity litres | Mass 2) moment of inertia J kgm² | Weight 2) kg |
|---|---|---|---|---|---|---|---|---|---|---|---|---|---|---|---|---|---|
| **30** | 0.082 | 7500 | 10 | 12 | 32 | 118 | 92 | 55 | 50 | 75 | 45 | 3.5 | E- 7 | 0.10 | 0.04 | 0.007 | 4.5 |
| **40** | 0.146 | 6900 | 20 | 22 | 46 | 145 | 115 | 68.5 | 60 | 90 | 60 | 7.0 | E-14 | 0.11 | 0.06 | 0.018 | 8.0 |
| **50** | 0.288 | 6300 | 20 | 22 | 58 | 165 | 135 | 78.5 | 70 | 110 | 75 | 7.0 | E-14 | 0.19 | 0.10 | 0.035 | 11.8 |
| **60** | 0.50 | 5900 | 26 | 28 | 70 | 200 | 160 | 91.5 | 80 | 120 | 90 | 8.5 | E-17 | 0.27 | 0.14 | 0.085 | 19.2 |
| **70** | 0.82 | 5400 | 26 | 28 | 78 | 220 | 178 | 102 | 90 | 130 | 100 | 9 | E-18 | 0.38 | 0.18 | 0.138 | 26.4 |
| **80** | 1.14 | 5000 | 30 | 32 | 92 | 240 | 196 | 112 | 100 | 150 | 120 | 9 | E-18 | 0.43 | 0.23 | 0.21 | 32.5 |
| **90** | 1.64 | 4700 | 30 | 32 | 100 | 270 | 225 | 126 | 110 | 170 | 130 | 12 | E-24 | 0.66 | 0.35 | 0.40 | 50 |
| **100** | 2.30 | 4300 | 53 | 55 | 110 | 280 | 240 | 136 | 120 | 180 | 140 | 12 | E-24 | 0.81 | 0.41 | 0.51 | 57 |
| **110** | 2.88 | 4000 | 63 | 65 | 120 | 310 | 265 | 146 | 130 | 190 | 155 | 12 | E-24 | 1.2 | 0.57 | 0.85 | 75 |
| **125** | 4.60 | 3700 | 73 | 75 | 138 | 340 | 295 | 170 | 150 | 215 | 175 | 15 | E-30 | 1.5 | 0.74 | 1.65 | 104 |
| **140** | 6.48 | 3400 | 83 | 85 | 156 | 390 | 325 | 185 | 165 | 230 | 200 | 15 | E-30 | 1.8 | 0.98 | 2.45 | 147 |
| **160** | 9.24 | 3100 | 118 | 120 | 180 | 435 | 370 | 213 | 190 | 270 | 230 | 17 | E-34 | 2.8 | 1.6 | 4.51 | 208 |
| **180** | 12.92 | 2900 | 138 | 140 | 200 | 480 | 415 | 239 | 220 | 300 | 260 | 17 | E-34 | 3.5 | 2.1 | 7.8 | 295 |
| **200** | 18.4 | 2700 | 158 | 160 | 225 | 545 | 465 | 269 | 245 | 340 | 290 | 20 | E-40 | 5.1 | 2.8 | 14.1 | 422 |
| **220** | 25.6 | 2400 | 158 | 160 | 250 | 580 | 510 | 294 | 270 | 360 | 355 | 24 | E-48 | 5.2 | 2.8 | 20.4 | 532 |
| **240** | 32.8 | 2200 | 178 | 180 | 275 | 645 | 560 | 316 | 290 | 380 | 390 | 26 | E-52 | 7.3 | 3.5 | 31.9 | 687 |
| **260** | 41.0 | 2100 | 198 | 200 | 295 | 680 | 595 | 338 | 310 | 400 | 415 | 28 | E-56 | 8.3 | 4.0 | 43.7 | 832 |
| **280** | 51.4 | 2000 | 218 | 220 | 325 | 745 | 660 | 370 | 340 | 440 | 460 | 30 | E-60 | 10.5 | 6.0 | 71 | 1110 |
| **300** | 64.8 | 1900 | 238 | 240 | 340 | 775 | 675 | 390 | 360 | 470 | 480 | 30 | E-60 | 11.5 | 8.0 | 85.8 | 1255 |
| **320** | 82.0 | 1800 | 258 | 260 | 375 | 825 | 725 | 410 | 380 | 500 | 525 | 30 | E-60 | 13.5 | 9.0 | 121 | 1515 |
| **340** | 98.6 | 1700 | 278 | 280 | 400 | 915 | 795 | 430 | 390 | 520 | 560 | 40 | E-80 | 21 | 11.0 | 188 | 1930 |
| **360** | 118.3 | 950 | 297 | 300 | 420 | 960 | 840 | 442 | 400 | 540 | 590 | 42 | E-84 | 27 | 12 | 253 | 2280 |
| **380** | 138.0 | 900 | 317 | 320 | 445 | 1010 | 890 | 462 | 420 | 560 | 625 | 42 | E-84 | 30 | 13 | 355 | 2660 |
| **400** | 165.1 | 875 | 337 | 340 | 460 | 1050 | 925 | 472 | 430 | 580 | 650 | 42 | E-84 | 33 | 15 | 382 | 2830 |

Subject to change due to technical improvement.


RENK Aktiengesellschaft, Rheine Works · Phone: +49 5971 790 0 · Fax: +49 5971 790 208 and 790 256

# Curved Tooth Couplings

## Construction Series SBLk

Dimension Table No. 243 130/ 1

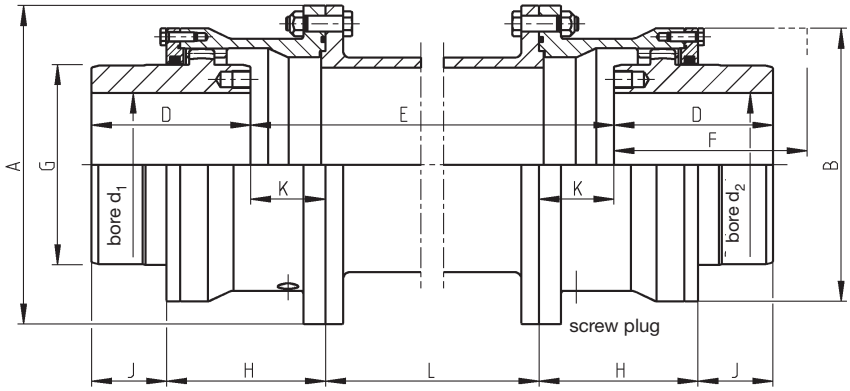


For coupling selection, please see page 6.

Torsional stiffness values and mass moments of inertia for couplings with spacer are contained in the data table for SBk-type couplings.

The dismounting dimension F is required to allow vertical installation and removal of the machines and O-ring replacement.

**Sizes 38 to 225 are available from stock, without spacer.**
**Other sizes available on request.**

The maximum permissible static parallel misalignment depends on the permissible angular misalignment and on the length of the spacer. The permissible angular misalignment for SBLk-type couplings is $\Delta K_{w\ perm.} = 0.75°$ per coupling half.

Higher misalignment capacity is possible, but requires special measures.

**Note:** The constructional design of the SBLk series allows different hub configurations in the sleeve.

Please see Hub Configuration for SBk-type couplings.

1) The speed $n_{max}$ depends on the length and weight of the spacer.

The maximum speed capacity is determined by the misalignment. Please see the table 'Speed Factors'.

2) Values for the complete coupling without spacer, with bore $d_1$,$d_{2max.}$

| Type SBLk | Norm. cont. duty | Speed 1) | Dimensions | | | | | | | | | | | | | | |
|---|---|---|---|---|---|---|---|---|---|---|---|---|---|---|---|---|---|
| | | | bore $d_1$;$d_2$ | | | | | | | | | | | | Total grease 2) quantity | Mass 2) moment of inertia J | Weight 2) |
| Size | $\frac{P_{KN}}{n}$ | $n_{max.}$ | min | max | A | B | D | F | G | H | J | K | L | | | | |
| | kW·min | rpm | mm | mm | mm | mm | mm | mm | mm | mm | mm | mm | mm | | kg | kgm² | kg |
| **38** | 0.082 | 7500 | 12 | 42 | 118 | 92 | 60 | 90 | 60 | 58.5 | 17 | 15.5 | E- 31 | | 0.09 | 0.01 | 4.7 |
| **48** | 0.146 | 6900 | 22 | 55 | 145 | 115 | 70 | 100 | 77 | 72.0 | 26 | 28 | E- 56 | | 0.09 | 0.02 | 8.6 |
| **60** | 0.288 | 6300 | 22 | 65 | 165 | 135 | 80 | 110 | 90 | 82.0 | 32.5 | 34.5 | E- 69 | | 0.17 | 0.04 | 12.6 |
| **70** | 0.50 | 5900 | 28 | 80 | 200 | 160 | 90 | 120 | 112.5 | 94.5 | 40 | 44.5 | E- 89 | | 0.25 | 0.09 | 21 |
| **80** | 0.82 | 5400 | 28 | 92 | 220 | 178 | 100 | 130 | 128.5 | 105 | 46 | 51 | E-102 | | 0.35 | 0.15 | 28 |
| **90** | 1.14 | 5000 | 32 | 105 | 240 | 196 | 110 | 140 | 145 | 115 | 53 | 58 | E-116 | | 0.40 | 0.23 | 35 |
| **100** | 1.64 | 4700 | 32 | 115 | 270 | 225 | 125 | 150 | 160.5 | 130 | 58 | 63 | E-126 | | 0.60 | 0.44 | 52 |
| **110** | 2.30 | 4300 | 55 | 126 | 280 | 240 | 140 | 170 | 176.0 | 140 | 66 | 66 | E-132 | | 0.75 | 0.57 | 62 |
| **125** | 2.88 | 4000 | 65 | 145 | 310 | 265 | 150 | 180 | 200.5 | 150 | 71 | 71 | E-142 | | 1.0 | 0.94 | 82 |
| **140** | 4.60 | 3700 | 75 | 162 | 340 | 295 | 170 | 200 | 224.5 | 175 | 80 | 85 | E-170 | | 1.3 | 1.86 | 115 |
| **160** | 6.48 | 3400 | 85 | 185 | 390 | 325 | 190 | 230 | 256.5 | 190 | 88 | 88 | E-176 | | 1.6 | 2.84 | 160 |
| **180** | 9.24 | 3100 | 120 | 210 | 435 | 370 | 220 | 260 | 288.5 | 219 | 106 | 105 | E-210 | | 2.6 | 5.18 | 228 |
| **200** | 12.92 | 2900 | 140 | 230 | 480 | 415 | 250 | 300 | 320.5 | 249 | 121 | 120 | E-240 | | 3.3 | 8.77 | 316 |
| **225** | 18.4 | 2700 | 160 | 260 | 545 | 465 | 280 | 330 | 362 | 279 | 134 | 133 | E-266 | | 4.8 | 15.6 | 449 |
| **250** | 25.6 | 2400 | 160 | 280 | 580 | 510 | 300 | 350 | 400 | 282 | 164 | 146 | E-292 | | 5 | 22.3 | 564 |
| **265** | 32.8 | 2200 | 180 | 310 | 645 | 560 | 330 | 380 | 440 | 304 | 174 | 148 | E-296 | | 7 | 34.2 | 757 |
| **280** | 41.0 | 2100 | 200 | 325 | 680 | 595 | 330 | 380 | 460 | 324 | 194 | 188 | E-376 | | 8 | 46.5 | 873 |
| **315** | 51.4 | 2000 | 220 | 360 | 745 | 660 | 360 | 420 | 510 | 356 | 205 | 201 | E-402 | | 10 | 73 | 1090 |
| **335** | 64.8 | 1900 | 240 | 380 | 775 | 675 | 380 | 440 | 535 | 377 | 219 | 216 | E-432 | | 11 | 114 | 1315 |
| **355** | 82.0 | 1800 | 260 | 410 | 825 | 725 | 400 | 460 | 580 | 398 | 228.5 | 226.5 | E-453 | | 13 | 129 | 1571 |
| **375** | 98.6 | 1700 | 280 | 440 | 915 | 795 | 420 | 480 | 620 | 410 | 224.5 | 214.5 | E-429 | | 20 | 195 | 1970 |
| **400** | 118.3 | 950 | 330 | 470 | 960 | 840 | 440 | 500 | 665 | 421 | 226.5 | 207.5 | E-415 | | 26 | 247 | 2259 |
| **425** | 138.0 | 900 | 355 | 500 | 1010 | 890 | 460 | 520 | 710 | 441 | 237.5 | 218.5 | E-437 | | 29 | 337 | 2600 |
| **450** | 165.1 | 875 | 370 | 520 | 1050 | 925 | 480 | 550 | 730 | 451 | 240.0 | 211.0 | E-422 | | 32 | 396 | 3087 |

Subject to change due to technical improvement.

# Curved Tooth Couplings

## Construction Series LBLk

Dimension Table No. 243 130/ 2

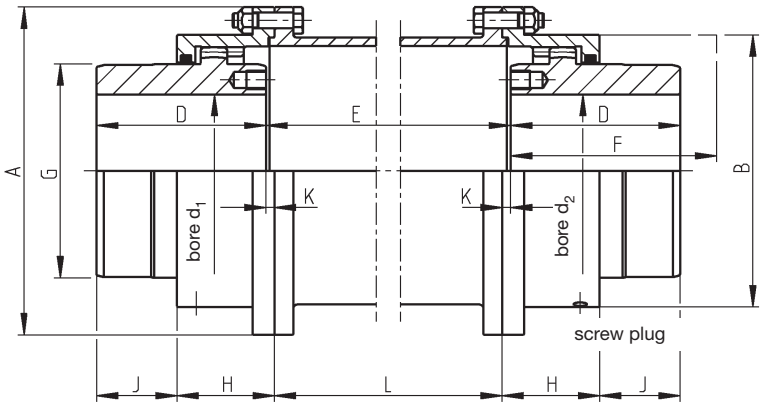


For coupling selection, please see page 6.

Torsional stiffness values, mass moments of inertia for couplings with spacer and weight details are contained in the data table for LBk-type couplings.

**Sizes 32 to 225 are available from stock, without spacer.**
**Other sizes available on request.**

The dismounting dimension F is required to allow vertical installation and removal of the machines and O-ring replacement.

The maximum permissible static parallel misalignment depends on the permissible angular misalignment and on the length of the spacer. The permissible angular misalignment for LBLk coupling types is $\Delta K_{w\ perm.} = 0.75°$ per coupling half.

Higher misalignment capacity is possible, but requires special measures.

1) The speed $n_{max}$ depends on the length and weight of the spacer.

The maximum speed capacity is determined by the misalignment.
Please see table 'Speed Factors'.

2) Values for the complete coupling without spacer, with bore $d_1$,$d_{2max.}$

| Type LBLk | Norm. cont. duty | Speed 1) | Dimensions | | | | | | | | | | | | | | |
|---|---|---|---|---|---|---|---|---|---|---|---|---|---|---|---|---|---|
| | | | bore $d_1$;$d_2$ | | | | | | | | | | | | Total grease 2) quantity | Mass 2) moment of inertia J | Weight 2) |
| Size | $\frac{P_{KN}}{n}$ | $n_{max.}$ | min | max | A | B | D | F | G | H | J | K | L | | | | |
| | kW·min | rpm | mm | mm | mm | mm | mm | mm | mm | mm | mm | mm | mm | | kg | kgm² | kg |
| **32** | 0.050 | 8500 | 12 | 35 | 105 | 74 | 50 | 80 | 48 | 45.0 | 9.5 | 4.5 | E- 9 | | 0.03 | 0.0034 | 2.9 |
| **38** | 0.082 | 7500 | 12 | 42 | 115 | 88 | 60 | 90 | 60 | 50.5 | 14.5 | 5.0 | E-10 | | 0.04 | 0.0059 | 4.3 |
| **48** | 0.146 | 6900 | 22 | 55 | 145 | 108 | 70 | 100 | 77 | 51.0 | 24.0 | 5.0 | E-10 | | 0.06 | 0.015 | 7.0 |
| **60** | 0.288 | 6300 | 22 | 65 | 165 | 125 | 80 | 110 | 90 | 53.5 | 32.0 | 5.5 | E-11 | | 0.10 | 0.026 | 9.3 |
| **70** | 0.50 | 5900 | 28 | 80 | 195 | 146 | 90 | 120 | 112.5 | 56.0 | 40.0 | 6 | E-12 | | 0.15 | 0.059 | 14.7 |
| **80** | 0.82 | 5400 | 28 | 92 | 215 | 168 | 100 | 130 | 128.5 | 59.5 | 46.5 | 6 | E-12 | | 0.22 | 0.097 | 20.0 |
| **90** | 1.14 | 5000 | 32 | 105 | 230 | 185 | 110 | 140 | 145 | 63.5 | 53.5 | 7 | E-14 | | 0.29 | 0.14 | 25.4 |
| **100** | 1.64 | 4700 | 32 | 115 | 265 | 210 | 125 | 150 | 160.5 | 74.0 | 58.0 | 7 | E-14 | | 0.44 | 0.28 | 38.0 |
| **110** | 2.30 | 4300 | 55 | 126 | 270 | 224 | 140 | 170 | 176.0 | 80.5 | 66.5 | 7 | E-14 | | 0.55 | 0.36 | 45.6 |
| **125** | 2.88 | 4000 | 65 | 145 | 305 | 245 | 150 | 180 | 200.5 | 87.5 | 70.5 | 8 | E-16 | | 0.79 | 0.64 | 62 |
| **140** | 4.60 | 3700 | 75 | 162 | 330 | 270 | 170 | 200 | 224.5 | 98.5 | 80.5 | 9 | E-18 | | 0.90 | 1.03 | 82 |
| **160** | 6.48 | 3400 | 85 | 185 | 375 | 305 | 190 | 230 | 256.5 | 110.5 | 89.5 | 10 | E-20 | | 1.23 | 1.5 | 93 |
| **180** | 9.24 | 3100 | 120 | 210 | 425 | 348 | 220 | 260 | 288.5 | 125.0 | 107.0 | 12 | E-24 | | 1.90 | 3.6 | 177 |
| **200** | 12.92 | 2900 | 140 | 230 | 470 | 392 | 250 | 300 | 320.5 | 136.0 | 126.0 | 12 | E-24 | | 2.40 | 6.2 | 245 |
| **225** | 18.4 | 2700 | 160 | 260 | 535 | 437 | 280 | 330 | 362.0 | 157.5 | 136.5 | 14 | E-28 | | 3.70 | 11.2 | 347 |

Subject to change due to technical improvement.


RENK Aktiengesellschaft, Rheine Works · Phone: +49 5971 790 0 · Fax: +49 5971 790 208 and 790 256

# Curved Tooth Couplings

## Construction Series SRL

Dimension Table No. 243 131

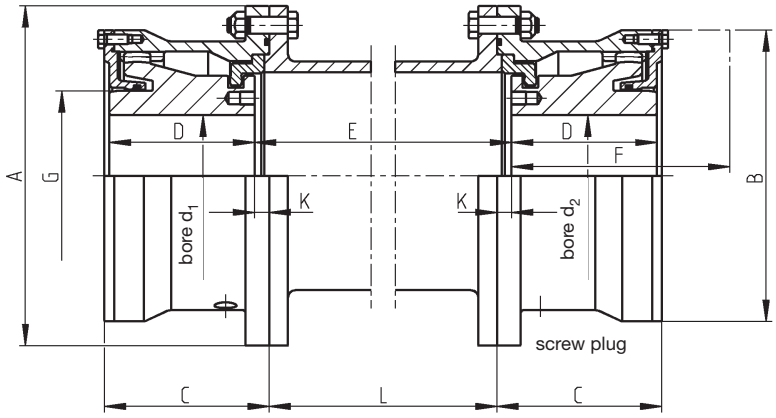


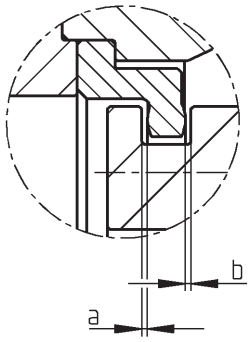


The construction series SRL is equipped with two Z-shaped retaining rings for end float limitation. For these types, the permissible angular misalignment depends on the axial clearances a and b.

Torsional stiffness values, mass moments of inertia for couplings with spacer, and weight details are contained in the data table for SB-type couplings.

**Sizes 30 to 200 are available from stock, without spacer.**
**Other sizes available on request.**

The dismounting dimension F is required for the vertical installation and removal of the machines and for mounting the retaining rings and O-rings.

1) The speed $n_{max}$ depends on the length and weight of the spacer.

The maximum speed capacity is determined by the misalignment.
Please see table 'Speed Factors'.

2) The permissible angular misalignment $\Delta K_{w\ perm.}$ is 0.6° per coupling half, based on the values stated in the list.

The axial clearances a and b can be varied if the operation conditions require so.

3) Values for the complete coupling without spacer, with bore $d_1;d_{2\ max.}$

For coupling selection,
please see page 6.

| Type SRL Size | Norm. cont. duty $\frac{P_{KN}}{n}$ kW·min | Speed 1) $n_{max.}$ rpm | Dimensions bore $d_1;d_2$ pre mm | min mm | max mm | A mm | B mm | C mm | D mm | F mm | G mm | K mm | L mm | Axial clearances 2) a and b mm | Total grease 3) quantity kg | Total oil 3) quantity litres | Mass 3) moment of inertia J $kgm^2$ | Weight 3) kg |
|---|---|---|---|---|---|---|---|---|---|---|---|---|---|---|---|---|---|---|
| **30** | 0.082 | 7500 | 10 | 12 | 32 | 118 | 92 | 55 | 50 | 75 | 45 | 3.5 | E- 7 | 0.5 | 0.09 | 0.09 | 0.01 | 4.7 |
| **40** | 0.146 | 6900 | 20 | 22 | 46 | 145 | 115 | 68.5 | 60 | 90 | 60 | 7 | E-14 | 0.5 | 0.17 | 0.17 | 0.02 | 8.3 |
| **50** | 0.288 | 6300 | 20 | 22 | 58 | 165 | 135 | 78.5 | 70 | 110 | 75 | 7 | E-14 | 0.5 | 0.27 | 0.27 | 0.04 | 12.4 |
| **60** | 0.50 | 5900 | 26 | 28 | 70 | 200 | 160 | 91.5 | 80 | 120 | 90 | 9 | E-18 | 0.5 | 0.45 | 0.45 | 0.09 | 20.0 |
| **70** | 0.82 | 5400 | 26 | 28 | 78 | 220 | 178 | 102 | 90 | 130 | 100 | 9 | E-18 | 0.5 | 0.59 | 0.59 | 0.14 | 27.7 |
| **80** | 1.14 | 5000 | 30 | 32 | 92 | 240 | 196 | 112 | 100 | 150 | 120 | 9 | E-18 | 0.5 | 0.77 | 0.77 | 0.22 | 34 |
| **90** | 1.64 | 4700 | 30 | 32 | 100 | 270 | 225 | 126 | 110 | 170 | 130 | 12 | E-24 | 0.5 | 1.3 | 1.3 | 0.42 | 53 |
| **100** | 2.30 | 4300 | 53 | 55 | 110 | 280 | 240 | 136 | 120 | 180 | 140 | 12 | E-24 | 1.0 | 1.5 | 1.5 | 0.54 | 60 |
| **110** | 2.88 | 4000 | 63 | 65 | 120 | 310 | 265 | 146 | 130 | 190 | 155 | 12 | E-24 | 1.0 | 1.9 | 1.9 | 0.88 | 79 |
| **125** | 4.60 | 3700 | 73 | 75 | 138 | 340 | 295 | 170 | 150 | 215 | 175 | 15 | E-30 | 1.0 | 2.5 | 2.5 | 1.70 | 108 |
| **140** | 6.48 | 3400 | 83 | 85 | 156 | 390 | 325 | 185 | 165 | 230 | 200 | 15 | E-30 | 1.0 | 3.2 | 3.2 | 2.55 | 153 |
| **160** | 9.24 | 3100 | 118 | 120 | 180 | 435 | 370 | 213 | 190 | 270 | 230 | 17 | E-34 | 1.0 | 4.7 | 4.7 | 4.71 | 217 |
| **180** | 12.92 | 2900 | 138 | 140 | 200 | 480 | 415 | 239 | 220 | 300 | 260 | 17 | E-34 | 1.0 | 7.2 | 7.2 | 8.1 | 306 |
| **200** | 18.4 | 2700 | 158 | 160 | 225 | 545 | 465 | 269 | 245 | 340 | 290 | 20 | E-40 | 1.0 | 11.0 | 11.0 | 14.5 | 443 |
| **220** | 25.6 | 2400 | 158 | 160 | 250 | 580 | 510 | 294 | 270 | 360 | 355 | 24 | E-48 | 1.5 | 11.8 | 11.8 | 21.4 | 559 |
| **240** | 32.8 | 2200 | 178 | 180 | 275 | 645 | 560 | 316 | 290 | 380 | 390 | 26 | E-52 | 1.5 | 12.8 | 12.8 | 33.5 | 722 |
| **260** | 41.0 | 2100 | 198 | 200 | 295 | 680 | 595 | 338 | 310 | 400 | 415 | 28 | E-56 | 1.5 | 14.4 | 14.4 | 45.7 | 872 |
| **280** | 51.4 | 2000 | 218 | 220 | 325 | 745 | 660 | 370 | 340 | 440 | 460 | 30 | E-60 | 1.5 | 17.5 | 17.5 | 75 | 1170 |
| **300** | 64.8 | 1900 | 238 | 240 | 340 | 775 | 675 | 390 | 360 | 470 | 480 | 30 | E-60 | 1.5 | 21.5 | 21.5 | 91.4 | 1335 |
| **320** | 82.0 | 1800 | 258 | 260 | 375 | 825 | 725 | 410 | 380 | 500 | 525 | 30 | E-60 | 1.5 | 22 | 22 | 128 | 1610 |
| **340** | 98.6 | 1700 | 278 | 280 | 400 | 915 | 795 | 430 | 390 | 520 | 560 | 40 | E-80 | 1.5 | 29 | 29 | 198 | 2040 |

Subject to change due to technical improvement.

# Curved Tooth Couplings

## Construction Series SRLk

Dimension Table No. 243 132/ 1

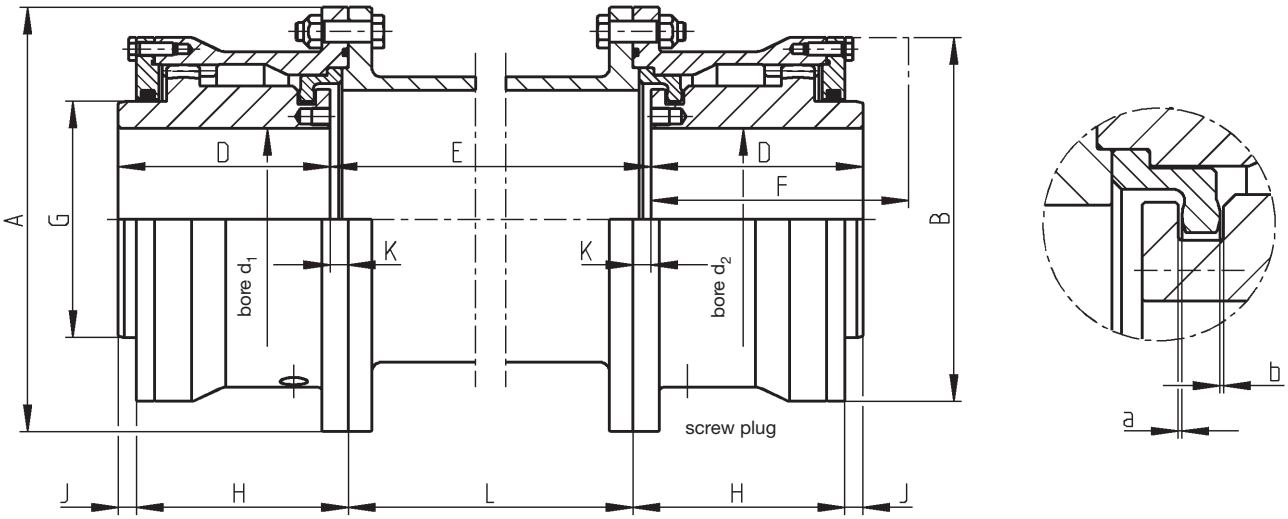


The construction series SRLk is equipped with two Z-shaped retaining rings for end float limitation. For these types, the permissible angular misalignment depends on the axial clearances a and b.

For coupling selection,
please see page 6.

**Spacer length**
**L = E - 2 x K**
**Other sizes available on request.**

Torsional stiffness values, mass moments of inertia for couplings with spacer, and weight details are contained in the data table for SBk-type couplings.

The dismounting dimension F is required for the vertical installation and removal of the machines and for mounting the retaining rings and O-rings.

1) The speed $n_{max}$ depends on the length and weight of the spacer.

The maximum speed capacity is determined by the misalignment. Please see the table 'Speed Factors'.

2) The permissible angular misalignment $\Delta K_{w\ perm.}$ is 0.6° per coupling half, based on the values stated in the list.

The axial clearances a and b can be varied if the operation conditions require so.

3) Values for the complete coupling without spacer, with bore $d_1;d_{2\ max.}$

| Type SRLk Size | Norm. cont. duty $P_{KN}/n$ kW·min | Speed 1) $n_{max.}$ rpm | Dimensions bore $d_1;d_2$ min mm | max mm | A mm | B mm | D mm | F mm | G mm | H mm | J mm | K mm | Axial clearances 2) a and b mm | Total grease 3) quantity kg | Mass 3) moment of inertia J kgm² | Weight 3) kg |
|---|---|---|---|---|---|---|---|---|---|---|---|---|---|---|---|---|
| **38** | 0.082 | 7500 | 12 | 40 | 118 | 92 | 60 | 90 | 52 | 58.5 | 5 | 3.5 | 0.5 | 0.08 | 0.01 | 5.3 |
| **48** | 0.146 | 6900 | 22 | 50 | 145 | 115 | 70 | 100 | 71 | 72.0 | 5 | 7.0 | 0.5 | 0.15 | 0.02 | 10 |
| **60** | 0.288 | 6300 | 22 | 63 | 165 | 135 | 80 | 110 | 83 | 82.0 | 5 | 7.0 | 0.5 | 0.22 | 0.05 | 15 |
| **70** | 0.50 | 5900 | 28 | 75 | 200 | 160 | 90 | 120 | 103 | 94.5 | 4 | 8.5 | 0.5 | 0.30 | 0.10 | 24 |
| **80** | 0.82 | 5400 | 28 | 85 | 220 | 178 | 100 | 130 | 116 | 105 | 4 | 9 | 0.5 | 0.46 | 0.16 | 31 |
| **90** | 1.14 | 5000 | 32 | 95 | 240 | 196 | 110 | 140 | 133 | 115 | 4 | 9 | 0.5 | 0.63 | 0.25 | 42 |
| **100** | 1.64 | 4700 | 32 | 105 | 270 | 225 | 125 | 150 | 142 | 130 | 7 | 12 | 0.5 | 1.0 | 0.50 | 60 |
| **110** | 2.30 | 4300 | 55 | 115 | 280 | 240 | 140 | 170 | 156 | 140 | 12 | 12 | 1.0 | 1.1 | 0.64 | 72 |
| **125** | 2.88 | 4000 | 65 | 130 | 310 | 265 | 150 | 180 | 177 | 150 | 12 | 12 | 1.0 | 1.2 | 1.00 | 96 |
| **140** | 4.60 | 3700 | 75 | 150 | 340 | 295 | 170 | 200 | 200 | 175 | 10 | 15 | 1.0 | 1.5 | 1.93 | 136 |
| **160** | 6.48 | 3400 | 85 | 170 | 390 | 325 | 190 | 230 | 230 | 190 | 15 | 15 | 1.0 | 1.8 | 3.14 | 182 |
| **180** | 9.24 | 3100 | 120 | 190 | 435 | 370 | 220 | 260 | 261 | 219 | 18 | 17 | 1.0 | 3.0 | 5.75 | 268 |
| **200** | 12.92 | 2900 | 140 | 210 | 480 | 415 | 250 | 300 | 296 | 249 | 18 | 17 | 1.0 | 4.8 | 9.85 | 365 |
| **225** | 18.4 | 2700 | 160 | 240 | 545 | 465 | 280 | 330 | 338 | 279 | 21 | 20 | 1.0 | 7.4 | 18.40 | 553 |

Subject to change due to technical improvement.


RENK Aktiengesellschaft, Rheine Works · Phone: +49 5971 790 0 · Fax: +49 5971 790 208 and 790 256

# Curved Tooth Couplings

## Construction Series LRLkn

Dimension Table No. 243 352

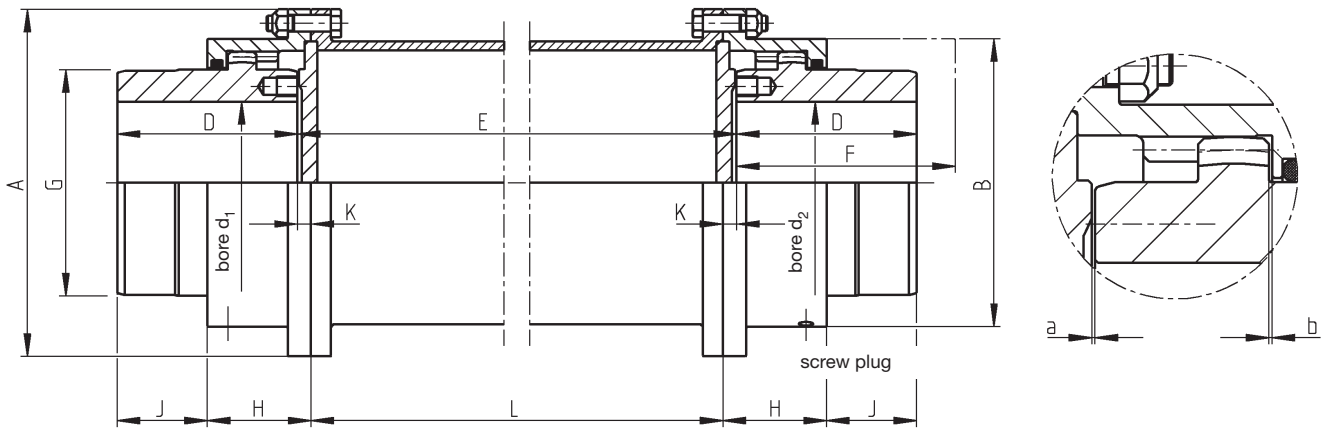


The construction series LRLkn is equipped with two crowned retaining plates for end float limitation. For these types, the permissible angular misalignment depends on the axial clearances a and b.

For coupling selection, please see page 6.

Torsional stiffness values, mass moments of inertia for couplings with spacer, and weight details are contained in the data table for LBk-type couplings.

The dismounting dimension F is required for replacing the O-rings.

1) The speed $n_{max}$ depends on the length and weight of the spacer.

The maximum speed capacity is determined by the misalignment.
Please see table 'Speed Factors'.

2) The permissible angular misalignment $\Delta K_{w\ perm.}$ is 0.6° per coupling half, based on the values stated in the list.

The axial clearances a and b can be varied if the operation conditions require so.

3) Values for the complete coupling without spacer, with bore $d_1;d_{2\ max.}$

**Spacer length**
**L = E - 2 x K**
**Other sizes available on request.**

| Type LRLkn | Norm. cont. duty | Speed 1) | Dimensions | | | | | | | | | | Axial clearances 2) | Total grease 3) quantity | Mass 3) moment of inertia J | Weight 3) |
|---|---|---|---|---|---|---|---|---|---|---|---|---|---|---|---|---|
| | | | bore $d_1;d_2$ | | | | | | | | | | a and b | | | |
| Size | $\frac{P_{KN}}{n}$ | $n_{max.}$ | min | max | A | B | D | F | G | H | J | K | | | | |
| | kW·min | rpm | mm | mm | mm | mm | mm | mm | mm | mm | mm | mm | mm | kg | $kgm^2$ | kg |
| **32** | 0.050 | 8500 | 12 | 35 | 105 | 74 | 50 | 80 | 48 | 45.0 | 11.5 | 6.5 | 0.5 | 0.03 | 0.004 | 3.3 |
| **38** | 0.082 | 7500 | 12 | 42 | 115 | 88 | 60 | 90 | 60 | 50.5 | 16.5 | 7 | 0.5 | 0.04 | 0.006 | 4.8 |
| **48** | 0.146 | 6900 | 22 | 55 | 145 | 108 | 70 | 100 | 77 | 51.0 | 26.0 | 7 | 0.5 | 0.06 | 0.02 | 7.9 |
| **60** | 0.288 | 6300 | 22 | 65 | 165 | 125 | 80 | 110 | 90 | 53.5 | 35.0 | 8.5 | 0.5 | 0.10 | 0.03 | 10.7 |
| **70** | 0.50 | 5900 | 28 | 80 | 195 | 146 | 90 | 120 | 112 | 56.0 | 42.5 | 8.5 | 0.5 | 0.15 | 0.07 | 17.2 |
| **80** | 0.82 | 5400 | 28 | 92 | 215 | 168 | 100 | 130 | 128 | 59.5 | 49.5 | 9 | 0.5 | 0.22 | 0.11 | 23.2 |
| **90** | 1.14 | 5000 | 32 | 105 | 230 | 185 | 110 | 140 | 145 | 63.5 | 56.5 | 10 | 0.5 | 0.29 | 0.16 | 29.5 |
| **100** | 1.64 | 4700 | 32 | 115 | 265 | 210 | 125 | 150 | 160 | 74.0 | 61.5 | 10.5 | 0.5 | 0.44 | 0.31 | 44 |
| **110** | 2.30 | 4300 | 55 | 126 | 270 | 224 | 140 | 170 | 176 | 80.5 | 70.0 | 10.5 | 1.0 | 0.55 | 0.40 | 53 |
| **125** | 2.88 | 4000 | 65 | 145 | 305 | 245 | 150 | 180 | 200 | 87.5 | 75.0 | 12.5 | 1.0 | 0.79 | 0.69 | 72 |
| **140** | 4.60 | 3700 | 75 | 162 | 330 | 270 | 170 | 200 | 224 | 98.5 | 85.0 | 14 | 1.0 | 0.90 | 1.13 | 95 |
| **160** | 6.48 | 3400 | 85 | 185 | 375 | 305 | 190 | 230 | 256 | 110.5 | 94.0 | 15 | 1.0 | 1.23 | 1.68 | 110 |
| **180** | 9.24 | 3100 | 120 | 210 | 425 | 348 | 220 | 260 | 288 | 125.0 | 112.0 | 17 | 1.0 | 1.90 | 3.93 | 201 |
| **200** | 12.92 | 2900 | 140 | 230 | 470 | 392 | 250 | 300 | 320 | 136.0 | 132.0 | 18 | 1.0 | 2.40 | 6.70 | 278 |
| **225** | 18.4 | 2700 | 160 | 260 | 535 | 437 | 280 | 330 | 362 | 157.5 | 142.0 | 19.5 | 1.0 | 3.70 | 12.2 | 392 |

Subject to change due to technical improvement.

# Curved Tooth Couplings

## Construction Series SBG

Dimension Table No. 243 133

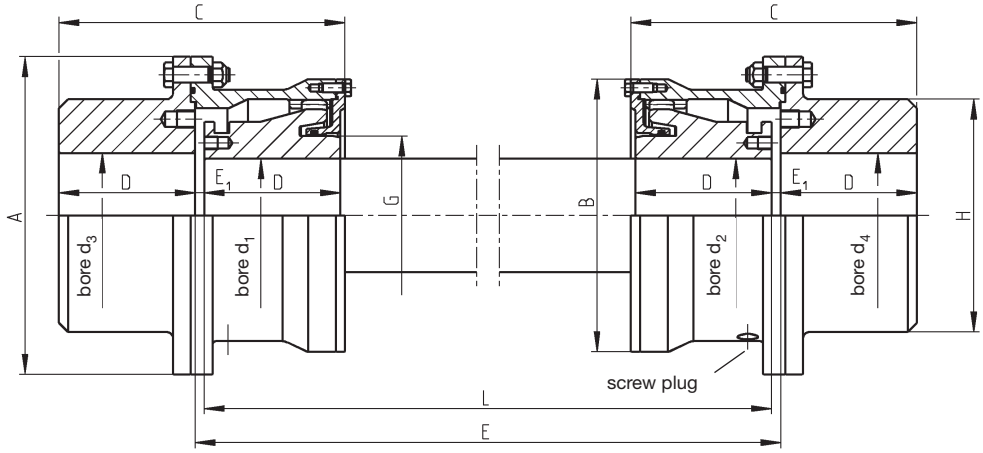


For coupling selection, please see page 6.

Torsional stiffness values for couplings with intermediate shaft are contained in the data table for SB-type couplings.

**Sizes 30 to 200 are available from stock, without intermediate shaft. Other sizes available on request.**

The maximum permissible static parallel misalignment depends on the permissible angular misalignment and on the length of the intermediate shaft. The permissible angular misalignment for SBG coupling types is $\Delta K_{w\ perm.} = 1.5°$ per coupling half.

Higher misalignment capacity is possible, but requires special measures.

1) The speed $n_{max}$ depends on the length and weight of the intermediate shaft.

The maximum speed capacity is determined by the misalignment. Please see the table 'Speed Factors'.

2) Values for the complete coupling without intermediate shaft, with bores $d_1$,$d_{2\ max}$ and $d_3$; $d_{4\ max.}$

| Type SBG | Norm. cont. duty | Speed 1) | Dimensions | | | | | | | | | | | | | | | | |
|---|---|---|---|---|---|---|---|---|---|---|---|---|---|---|---|---|---|---|---|
| | | | bore | | | | | | | | | | | | | | | | |
| | | | $d_1;d_2$ | | | $d_3;d_4$ | | | | | | | | | | Total grease quantity | Total oil quantity | Mass 2) moment of inertia J | Weight 2) |
| Size | $\frac{P_{KN}}{n}$ | $n_{max.}$ | pre | min | max | pre | min | max | A | B | C | D | $E_1$ | G | H | | | | |
| | kW·min | rpm | mm | mm | mm | mm | mm | mm | mm | mm | mm | mm | mm | mm | mm | kg | litres | kgm² | kg |
| **30** | 0.082 | 7500 | 10 | 12 | 32 | 10 | 12 | 55 | 118 | 92 | 105 | 50 | 3.5 | 45 | 80 | 0.09 | 0.04 | 0.01 | 7.7 |
| **40** | 0.146 | 6900 | 20 | 22 | 46 | 20 | 22 | 65 | 145 | 115 | 126.5 | 60 | 5 | 60 | 95 | 0.10 | 0.06 | 0.03 | 12.6 |
| **50** | 0.288 | 6300 | 20 | 22 | 58 | 20 | 22 | 75 | 165 | 135 | 146.5 | 70 | 5 | 75 | 112 | 0.18 | 0.09 | 0.06 | 19 |
| **60** | 0.50 | 5900 | 26 | 28 | 70 | 26 | 28 | 90 | 200 | 160 | 169 | 80 | 6 | 90 | 130 | 0.26 | 0.13 | 0.14 | 31 |
| **70** | 0.82 | 5400 | 26 | 28 | 78 | 26 | 28 | 100 | 220 | 178 | 189 | 90 | 6 | 100 | 150 | 0.36 | 0.16 | 0.23 | 45 |
| **80** | 1.14 | 5000 | 30 | 32 | 92 | 30 | 32 | 115 | 240 | 196 | 209 | 100 | 6 | 120 | 170 | 0.41 | 0.21 | 0.36 | 56 |
| **90** | 1.64 | 4700 | 30 | 32 | 100 | 30 | 32 | 130 | 270 | 225 | 232 | 110 | 8 | 130 | 190 | 0.62 | 0.32 | 0.67 | 83 |
| **100** | 2.30 | 4300 | 53 | 55 | 110 | 53 | 55 | 140 | 280 | 240 | 252 | 120 | 8 | 140 | 205 | 0.77 | 0.37 | 0.88 | 97 |
| **110** | 2.88 | 4000 | 63 | 65 | 120 | 63 | 65 | 155 | 310 | 265 | 272 | 130 | 8 | 155 | 225 | 1.1 | 0.53 | 1.45 | 129 |
| **125** | 4.60 | 3700 | 73 | 75 | 138 | 73 | 75 | 170 | 340 | 295 | 315 | 150 | 10 | 175 | 250 | 1.4 | 0.68 | 2.40 | 180 |
| **140** | 6.48 | 3400 | 83 | 85 | 156 | 83 | 85 | 195 | 390 | 325 | 345 | 165 | 10 | 200 | 285 | 1.7 | 0.9 | 4.34 | 252 |
| **160** | 9.24 | 3100 | 118 | 120 | 180 | 108 | 110 | 225 | 435 | 370 | 398 | 190 | 12 | 230 | 325 | 2.7 | 1.5 | 8.1 | 365 |
| **180** | 12.92 | 2900 | 138 | 140 | 200 | 132 | 134 | 250 | 480 | 415 | 454 | 220 | 12 | 260 | 360 | 3.4 | 1.9 | 13.8 | 508 |
| **200** | 18.4 | 2700 | 158 | 160 | 225 | 148 | 150 | 280 | 545 | 465 | 508 | 245 | 14 | 290 | 410 | 4.9 | 2.6 | 25.3 | 742 |
| **220** | 25.6 | 2400 | 158 | 160 | 250 | 158 | 160 | 320 | 580 | 510 | 556 | 270 | 16 | 355 | 450 | 5.2 | 2.8 | 36.9 | 934 |
| **240** | 32.8 | 2200 | 178 | 180 | 275 | 178 | 180 | 340 | 645 | 560 | 598 | 290 | 18 | 390 | 480 | 7.3 | 3.5 | 54.5 | 1175 |
| **260** | 41.0 | 2100 | 198 | 200 | 295 | 198 | 200 | 370 | 680 | 595 | 640 | 310 | 20 | 415 | 520 | 8.3 | 4 | 77 | 1450 |
| **280** | 51.4 | 2000 | 218 | 220 | 325 | 218 | 220 | 390 | 745 | 660 | 700 | 340 | 20 | 460 | 550 | 10.5 | 6 | 120 | 1885 |
| **300** | 64.8 | 1900 | 238 | 240 | 340 | 238 | 240 | 410 | 775 | 675 | 740 | 360 | 20 | 480 | 580 | 11.5 | 8 | 150 | 2170 |
| **320** | 82.0 | 1800 | 258 | 260 | 375 | 258 | 260 | 440 | 825 | 725 | 780 | 380 | 20 | 525 | 620 | 13.5 | 9 | 208 | 2620 |
| **340** | 98.6 | 1700 | 278 | 280 | 400 | 278 | 280 | 460 | 915 | 795 | 808 | 390 | 28 | 560 | 650 | 21 | 11 | 316 | 3310 |
| **360** | 118.3 | 950 | 297 | 300 | 420 | 297 | 300 | 485 | 960 | 840 | 830 | 400 | 30 | 590 | 680 | 27 | 12 | 410 | 3880 |
| **380** | 138.0 | 900 | 317 | 320 | 445 | 317 | 320 | 510 | 1010 | 890 | 870 | 420 | 30 | 625 | 720 | 30 | 13 | 558 | 4495 |
| **400** | 165.1 | 875 | 337 | 340 | 460 | 337 | 340 | 535 | 1050 | 925 | 890 | 430 | 30 | 650 | 750 | 33 | 15 | 662 | 4880 |

Subject to change due to technical improvement.


RENK Aktiengesellschaft, Rheine Works · Phone: +49 5971 790 0 · Fax: +49 5971 790 208 and 790 256

# Curved Tooth Couplings

## Construction Series SBGk

Dimension Table No. 243 134/ 1

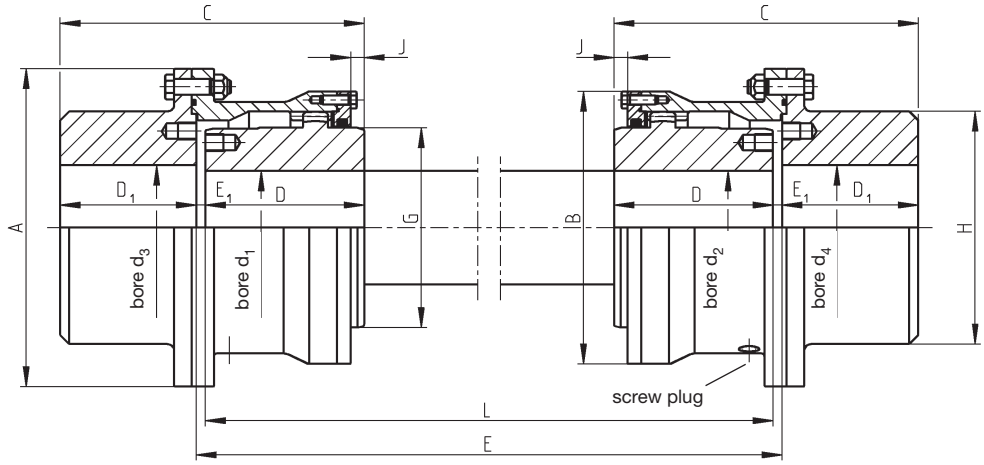


For coupling selection, please see page 6.

Torsional stiffness values for couplings with intermediate shaft and weight details are contained in the data table for SBk-type couplings.

**Sizes 38 to 225 are available from stock, without intermediate shaft. Other sizes available on request.**

The maximum permissible static parallel misalignment depends on the permissible angular misalignment and on the length of the intermediate shaft. The permissible angular misalignment for SBGk coupling types is $\Delta K_{w\ perm.}$ = 0.75° per coupling half.

Higher misalignment capacity is possible, but requires special measures.

1) The speed $n_{max}$ depends on the length and weight of the intermediate shaft.

The maximum speed capacity is determined by the misalignment. Please see the table 'Speed Factors'.

2) Values for the complete coupling without intermediate shaft, with bores $d_1$, $d_{2\ max}$ and $d_3$; $d_{4\ max.}$

| Type SBGk | Norm. cont. duty | Speed 1) | Dimensions | | | | | | | | | | | | | | | |
|---|---|---|---|---|---|---|---|---|---|---|---|---|---|---|---|---|---|---|
| | | | bore | | | | | | | | | | | | | Total grease quantity | Mass 2) moment of inertia J | Weight 2) |
| | | | $d_1$-$d_4$ | $d_1$;$d_2$ | $d_3$;$d_4$ | | | | | | | | | | | | | |
| Size | $P_{KN}$ / n | $n_{max.}$ | min | max | max | A | B | C | D | $D_1$ | $E_1$ | G | H | J | | | | |
| | kW·min | rpm | mm | mm | mm | mm | mm | mm | mm | mm | mm | mm | mm | mm | | kg | kgm² | kg |
| **38** | 0.082 | 7500 | 12 | 42 | 55 | 118 | 92 | 113.5 | 60 | 50 | 3.5 | 60 | 80 | 5 | | 0.09 | 0.01 | 8.3 |
| **48** | 0.146 | 6900 | 22 | 55 | 65 | 145 | 115 | 135 | 70 | 60 | 5 | 77 | 95 | 5 | | 0.09 | 0.03 | 13.5 |
| **60** | 0.288 | 6300 | 22 | 65 | 75 | 165 | 135 | 155 | 80 | 70 | 5 | 90 | 112 | 5 | | 0.17 | 0.06 | 20 |
| **70** | 0.50 | 5900 | 28 | 80 | 90 | 200 | 160 | 176 | 90 | 80 | 6 | 112.5 | 130 | 4 | | 0.25 | 0.14 | 33 |
| **80** | 0.82 | 5400 | 28 | 92 | 100 | 220 | 178 | 196 | 100 | 90 | 6 | 128 | 150 | 4 | | 0.35 | 0.24 | 46 |
| **90** | 1.14 | 5000 | 32 | 105 | 115 | 240 | 196 | 216 | 110 | 100 | 6 | 145 | 170 | 4 | | 0.40 | 0.38 | 58 |
| **100** | 1.64 | 4700 | 32 | 115 | 130 | 270 | 225 | 243 | 125 | 110 | 8 | 160.5 | 190 | 7 | | 0.60 | 0.68 | 86 |
| **110** | 2.30 | 4300 | 55 | 126 | 140 | 280 | 240 | 268 | 140 | 120 | 8 | 176 | 205 | 12 | | 0.75 | 0.95 | 102 |
| **125** | 2.88 | 4000 | 65 | 145 | 155 | 310 | 265 | 288 | 150 | 130 | 8 | 200.5 | 225 | 12 | | 1.0 | 1.54 | 135 |
| **140** | 4.60 | 3700 | 75 | 162 | 170 | 340 | 295 | 330 | 170 | 150 | 10 | 224.5 | 250 | 10 | | 1.3 | 2.86 | 189 |
| **160** | 6.48 | 3400 | 85 | 185 | 195 | 390 | 325 | 365 | 190 | 165 | 10 | 256.5 | 285 | 15 | | 1.6 | 4.60 | 255 |
| **180** | 9.24 | 3100 | 120 | 210 | 225 | 435 | 370 | 422 | 220 | 190 | 12 | 288.5 | 325 | 18 | | 2.6 | 8.54 | 380 |
| **200** | 12.92 | 2900 | 140 | 230 | 250 | 480 | 415 | 482 | 250 | 220 | 12 | 320.5 | 360 | 18 | | 3.3 | 15.1 | 526 |
| **225** | 18.4 | 2700 | 160 | 260 | 280 | 545 | 465 | 539 | 280 | 245 | 14 | 362 | 410 | 21 | | 4.8 | 26.7 | 763 |
| **250** | 25.6 | 2400 | 160 | 280 | 320 | 580 | 510 | 738 | 300 | 300 | 138 | 400 | 450 | 164 | | 5 | 40 | 995 |
| **265** | 32.8 | 2200 | 180 | 310 | 340 | 645 | 560 | 800 | 330 | 330 | 140 | 440 | 520 | 174 | | 7 | 57 | 1244 |
| **280** | 41.0 | 2100 | 200 | 325 | 370 | 680 | 595 | 840 | 330 | 330 | 180 | 460 | 520 | 194 | | 8 | 77 | 1408 |
| **315** | 51.4 | 2000 | 220 | 360 | 390 | 745 | 660 | 911 | 360 | 360 | 191 | 510 | 550 | 205 | | 10 | 122 | 1846 |
| **335** | 64.8 | 1900 | 240 | 380 | 410 | 775 | 675 | 966 | 380 | 380 | 206 | 535 | 580 | 219 | | 11 | 155 | 2214 |
| **355** | 82.0 | 1800 | 260 | 410 | 440 | 825 | 725 | 1016.5 | 400 | 400 | 216.5 | 580 | 620 | 228.5 | | 13 | 209 | 2612 |
| **375** | 98.6 | 1700 | 280 | 440 | 460 | 915 | 795 | 1042.5 | 420 | 420 | 202.5 | 620 | 650 | 224.5 | | 20 | 320 | 3565 |
| **400** | 118.3 | 950 | 330 | 470 | 485 | 960 | 840 | 1075.5 | 440 | 440 | 195.5 | 665 | 680 | 226.5 | | 26 | 411 | 3904 |
| **425** | 138.0 | 900 | 355 | 500 | 510 | 1010 | 890 | 1126.5 | 460 | 460 | 206.5 | 710 | 720 | 237.5 | | 29 | 545 | 4554 |
| **450** | 165.1 | 875 | 370 | 520 | 535 | 1050 | 925 | 1159 | 480 | 480 | 199 | 730 | 750 | 240 | | 32 | 659 | 5240 |

Subject to change due to technical improvement.

# Curved Tooth Couplings

## Construction Series LBGk

Dimension Table No. 243 134/ 2

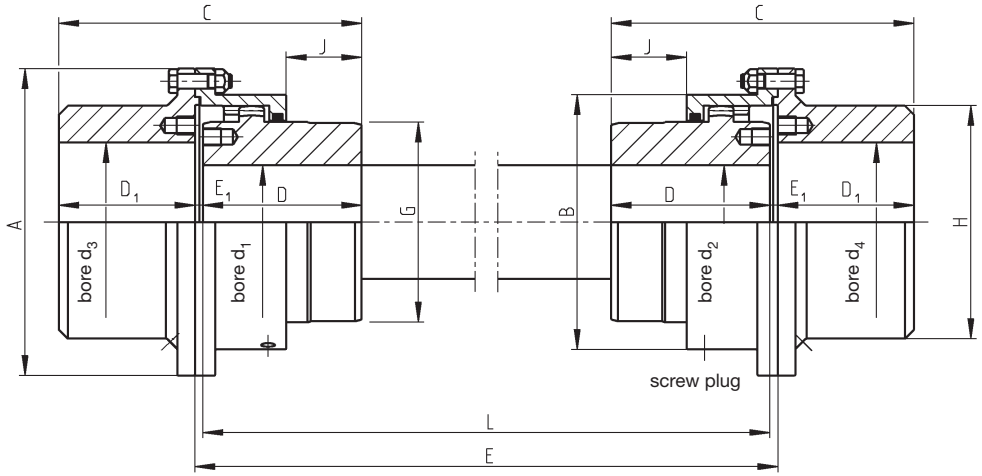


For coupling selection, please see page 6.

Torsional stiffness values for couplings with intermediate shaft and weight details are contained in the data table for LBk-type couplings.

**Sizes 32 to 225 are available from stock, without intermediate shaft. Other sizes available on request.**

The maximum permissible static parallel misalignment depends on the permissible angular misalignment and on the length of the intermediate shaft. The permissible angular misalignment for LBGk coupling types is $\Delta K_{w\ perm.} = 0.75°$ per coupling half.

Higher misalignment capacity is possible, but requires special measures.

1) The speed $n_{max}$ depends on the length and weight of the intermediate shaft.

The maximum speed capacity is determined by the misalignment. Please see table 'Speed Factors'.

2) Values for the complete coupling without intermediate shaft, with bores $d_1$, $d_{2\ max}$ and $d_3$; $d_{4max.}$

| Type LBGk Size | Norm. cont. duty $P_{KN}/n$ kW·min | Speed 1) $n_{max.}$ rpm | Dimensions bore $d_1$-$d_4$ min mm | bore $d_1$;$d_2$ max mm | bore $d_3$;$d_4$ max mm | A mm | B mm | C mm | D mm | $D_1$ mm | $E_1$ mm | G mm | H mm | J mm | Total grease quantity kg | Mass 2) moment of inertia J $kgm^2$ | Weight 2) kg |
|---|---|---|---|---|---|---|---|---|---|---|---|---|---|---|---|---|---|
| **32** | 0.050 | 8500 | 12 | 35 | 42 | 105 | 74 | 94.5 | 50 | 40 | 4.5 | 48 | 65 | 9.5 | 0.03 | 0.01 | 5.2 |
| **38** | 0.082 | 7500 | 12 | 42 | 55 | 115 | 88 | 115 | 60 | 50 | 5.0 | 60 | 80 | 14.5 | 0.04 | 0.01 | 7.4 |
| **48** | 0.146 | 6900 | 22 | 55 | 65 | 145 | 108 | 135 | 70 | 60 | 5.0 | 77 | 95 | 24.0 | 0.06 | 0.03 | 12.4 |
| **60** | 0.288 | 6300 | 22 | 65 | 75 | 165 | 125 | 155.5 | 80 | 70 | 5.5 | 90 | 112 | 32.0 | 0.10 | 0.05 | 17.5 |
| **70** | 0.50 | 5900 | 28 | 80 | 90 | 195 | 146 | 176 | 90 | 80 | 6 | 112.5 | 130 | 40.0 | 0.15 | 0.11 | 27 |
| **80** | 0.82 | 5400 | 28 | 92 | 100 | 215 | 168 | 196 | 100 | 90 | 6 | 128 | 150 | 46.5 | 0.22 | 0.19 | 38 |
| **90** | 1.14 | 5000 | 32 | 105 | 115 | 230 | 185 | 217 | 110 | 100 | 7 | 145 | 170 | 53.5 | 0.29 | 0.28 | 49 |
| **100** | 1.64 | 4700 | 32 | 115 | 130 | 265 | 210 | 242 | 125 | 110 | 7 | 160.5 | 190 | 58.0 | 0.44 | 0.54 | 71 |
| **110** | 2.30 | 4300 | 55 | 126 | 140 | 270 | 224 | 267 | 140 | 120 | 7 | 176 | 205 | 66.5 | 0.55 | 0.70 | 85 |
| **125** | 2.88 | 4000 | 65 | 145 | 155 | 305 | 245 | 288 | 150 | 130 | 8 | 200.5 | 225 | 70.5 | 0.79 | 1.22 | 115 |
| **140** | 4.60 | 3700 | 75 | 162 | 170 | 330 | 270 | 329 | 170 | 150 | 9 | 224.5 | 250 | 80.5 | 0.90 | 2.0 | 156 |
| **160** | 6.48 | 3400 | 85 | 185 | 195 | 375 | 305 | 365 | 190 | 165 | 10 | 256.5 | 285 | 89.5 | 1.23 | 3.3 | 197 |
| **180** | 9.24 | 3100 | 120 | 210 | 225 | 425 | 348 | 422 | 220 | 190 | 12 | 288.5 | 325 | 107.0 | 1.90 | 7.0 | 330 |
| **200** | 12.92 | 2900 | 140 | 230 | 250 | 470 | 392 | 482 | 250 | 220 | 12 | 320.5 | 360 | 126.0 | 2.40 | 11.9 | 457 |
| **225** | 18.4 | 2700 | 160 | 260 | 280 | 535 | 437 | 539 | 280 | 245 | 14 | 362 | 410 | 136.5 | 3.70 | 22.2 | 665 |

Subject to change due to technical improvement.


RENK Aktiengesellschaft, Rheine Works · Phone: +49 5971 790 0 · Fax: +49 5971 790 208 and 790 256

# Curved Tooth Couplings

## Construction Series SRG

Dimension Table No. 243 135

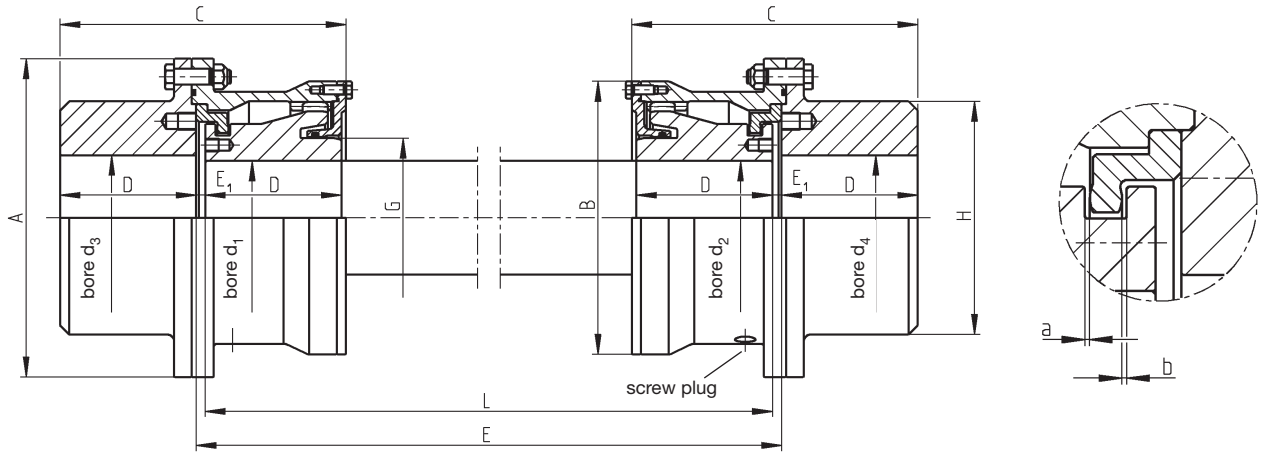


The construction series SRG is equipped with two Z-shaped retaining rings for end float limitation. For these types, the permissible angular misalignment depends on the axial clearances a and b.

For coupling selection, please see page 6.

**Sizes 30 to 200 available from stock, without intermediate shaft.**
**Other sizes available on request.**

Torsional stiffness values for couplings with intermediate shaft are contained in the data table for SB-type couplings.

1) The speed $n_{max}$ depends on the length and weight of the intermediate shaft.

The maximum speed capacity is determined by the misalignment.
Please see table 'Speed Factors'.

2) The permissible angular misalignment $\Delta K_{w\ perm.}$ is 0.6° per coupling half, based on the values stated in the list.

The axial clearances a and b can be varied if the operation conditions require so.

3) Values for the complete coupling without intermediate shaft, with bores $d_1$; $d_{2\ max.}$ and $d_3$; $d_{4max.}$

| Type SRG | Norm. cont. duty | Speed 1) | Dimensions | | | | | | | | | | | | | Axial clearances 2) a and b | Total grease or oil quantity | Mass 3) moment of inertia J | Weight 3) |
|---|---|---|---|---|---|---|---|---|---|---|---|---|---|---|---|---|---|---|---|
| | | | bore | | | | | | | | | | | | | | | | |
| | | | $d_1;d_2$ | | | $d_3;d_4$ | | | | | | | | | | | | | |
| Size | $\frac{P_{KN}}{n}$ | $n_{max.}$ | pre | min | max | pre | min | max | A | B | C | D | $E_1$ | G | H | | | | |
| | kW·min | rpm | mm | mm | mm | mm | mm | mm | mm | mm | mm | mm | mm | mm | mm | kg | kg/litres | kgm² | kg |
| **30** | 0.082 | 7500 | 10 | 12 | 32 | 10 | 12 | 55 | 118 | 92 | 105 | 50 | 3.5 | 45 | 80 | 0.5 | 0.09 | 0.012 | 8.0 |
| **40** | 0.146 | 6900 | 20 | 22 | 46 | 20 | 22 | 65 | 145 | 115 | 126.5 | 60 | 5 | 60 | 95 | 0.5 | 0.17 | 0.030 | 13.0 |
| **50** | 0.288 | 6300 | 20 | 22 | 58 | 20 | 22 | 75 | 165 | 135 | 146.5 | 70 | 5 | 75 | 112 | 0.5 | 0.27 | 0.062 | 19.8 |
| **60** | 0.50 | 5900 | 26 | 28 | 70 | 26 | 28 | 90 | 200 | 160 | 169 | 80 | 6 | 90 | 130 | 0.5 | 0.45 | 0.143 | 32 |
| **70** | 0.82 | 5400 | 26 | 28 | 78 | 26 | 28 | 100 | 220 | 178 | 189 | 90 | 6 | 100 | 150 | 0.5 | 0.59 | 0.235 | 46 |
| **80** | 1.14 | 5000 | 30 | 32 | 92 | 30 | 32 | 115 | 240 | 196 | 209 | 100 | 6 | 120 | 170 | 0.5 | 0.77 | 0.38 | 58 |
| **90** | 1.64 | 4700 | 30 | 32 | 100 | 30 | 32 | 130 | 270 | 225 | 232 | 110 | 8 | 130 | 190 | 0.5 | 1.3 | 0.69 | 86 |
| **100** | 2.30 | 4300 | 53 | 55 | 110 | 53 | 55 | 140 | 280 | 240 | 252 | 120 | 8 | 140 | 205 | 1.0 | 1.5 | 0.90 | 99 |
| **110** | 2.88 | 4000 | 63 | 65 | 120 | 63 | 65 | 155 | 310 | 265 | 272 | 130 | 8 | 155 | 225 | 1.0 | 1.9 | 1.49 | 133 |
| **125** | 4.60 | 3700 | 73 | 75 | 138 | 73 | 75 | 170 | 340 | 295 | 315 | 150 | 10 | 175 | 250 | 1.0 | 2.5 | 2.70 | 187 |
| **140** | 6.48 | 3400 | 83 | 85 | 156 | 83 | 85 | 195 | 390 | 325 | 345 | 165 | 10 | 200 | 285 | 1.0 | 3.2 | 4.42 | 259 |
| **160** | 9.24 | 3100 | 118 | 120 | 180 | 108 | 110 | 225 | 435 | 370 | 398 | 190 | 12 | 230 | 325 | 1.0 | 4.7 | 8.2 | 374 |
| **180** | 12.92 | 2900 | 138 | 140 | 200 | 132 | 134 | 250 | 480 | 415 | 454 | 220 | 12 | 260 | 360 | 1.0 | 7.2 | 14.1 | 521 |
| **200** | 18.4 | 2700 | 158 | 160 | 225 | 148 | 150 | 280 | 545 | 465 | 508 | 245 | 14 | 290 | 410 | 1.0 | 11.0 | 25.6 | 765 |
| **220** | 25.6 | 2400 | 158 | 160 | 250 | 158 | 160 | 320 | 580 | 510 | 556 | 270 | 16 | 355 | 450 | 1.5 | 11.8 | 37.9 | 964 |
| **240** | 32.8 | 2200 | 178 | 180 | 275 | 178 | 180 | 340 | 645 | 560 | 598 | 290 | 18 | 390 | 480 | 1.5 | 12.8 | 57.3 | 1210 |
| **260** | 41.0 | 2100 | 198 | 200 | 295 | 198 | 200 | 370 | 680 | 595 | 640 | 310 | 20 | 415 | 520 | 1.5 | 14.4 | 79.3 | 1485 |
| **280** | 51.4 | 2000 | 218 | 220 | 325 | 218 | 220 | 390 | 745 | 660 | 700 | 340 | 20 | 460 | 550 | 1.5 | 17.5 | 124 | 1950 |
| **300** | 64.8 | 1900 | 238 | 240 | 340 | 238 | 240 | 410 | 775 | 675 | 740 | 360 | 20 | 480 | 580 | 1.5 | 21.5 | 155 | 2255 |
| **320** | 82.0 | 1800 | 258 | 260 | 375 | 258 | 260 | 440 | 825 | 725 | 780 | 380 | 20 | 525 | 620 | 1.5 | 22 | 216 | 2710 |
| **340** | 98.6 | 1700 | 278 | 280 | 400 | 278 | 280 | 460 | 915 | 795 | 808 | 390 | 28 | 560 | 650 | 1.5 | 29 | 326 | 3420 |

Subject to change due to technical improvement.

# Curved Tooth Couplings

## Construction Series SRGk

Dimension Table No. 243 136/ 1

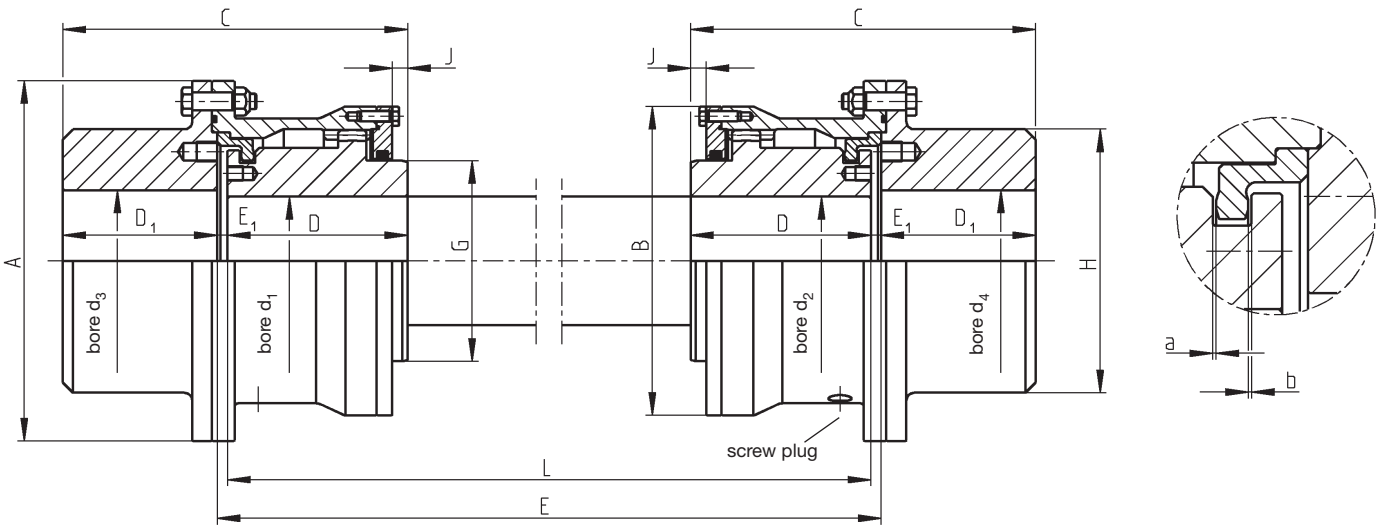


The construction series SRGk is equipped with two Z-shaped retaining rings for end float limitation.

For these types, the permissible angular misalignment depends on the axial clearances a and b.

For coupling selection, please see page 6.

Torsional stiffness values for couplings with intermediate shaft are contained in the data table for SBk-type couplings.

1) The speed $n_{max}$ depends on the length and weight of the intermediate shaft.

The maximum speed capacity is determined by the misalignment. Please see table 'Speed Factors'.

2) The permissible angular misalignment $\Delta K_{w\ perm.}$ is 0.6° per coupling half, based on the values stated in the list.

The axial clearances a and b can be varied if the operation conditions require so.

3) Values for the complete coupling without intermediate shaft, with bores $d_1$; $d_{2\ max.}$ and $d_3$; $d_{4\ max.}$

**Other sizes available on request.**

| Type SRGk Size | Norm. cont. duty $\frac{P_{KN}}{n}$ kW·min | Speed 1) $n_{max.}$ rpm | Dimensions bore $d_1$-$d_4$ min mm | bore $d_1$;$d_2$ max mm | bore $d_3$;$d_4$ max mm | A mm | B mm | C mm | D mm | $D_1$ mm | $E_1$ mm | G mm | H mm | J mm | Axial clearances 2) a and b mm | Total grease quantity kg | Mass 3) moment of inertia J $kgm^2$ | Weight 3) kg |
|---|---|---|---|---|---|---|---|---|---|---|---|---|---|---|---|---|---|---|
| **38** | 0.082 | 7500 | 12 | 40 | 55 | 118 | 92 | 113.5 | 60 | 50 | 3.5 | 52 | 80 | 5 | 0.5 | 0.08 | 0.013 | 8.5 |
| **48** | 0.146 | 6900 | 22 | 50 | 65 | 145 | 115 | 135 | 70 | 60 | 5 | 71 | 95 | 5 | 0.5 | 0.15 | 0.031 | 14.1 |
| **60** | 0.288 | 6300 | 22 | 63 | 75 | 165 | 135 | 155 | 80 | 70 | 5 | 83 | 112 | 5 | 0.5 | 0.22 | 0.062 | 20.5 |
| **70** | 0.50 | 5900 | 28 | 75 | 90 | 200 | 160 | 176 | 90 | 80 | 6 | 103 | 130 | 4 | 0.5 | 0.30 | 0.15 | 33.5 |
| **80** | 0.82 | 5400 | 28 | 85 | 100 | 220 | 178 | 196 | 100 | 90 | 6 | 116 | 150 | 4 | 0.5 | 0.46 | 0.25 | 48 |
| **90** | 1.14 | 5000 | 32 | 95 | 115 | 240 | 196 | 216 | 110 | 100 | 6 | 133 | 170 | 4 | 0.5 | 0.63 | 0.40 | 60 |
| **100** | 1.64 | 4700 | 32 | 105 | 130 | 270 | 225 | 243 | 125 | 110 | 8 | 142 | 190 | 7 | 0.5 | 1.0 | 0.72 | 90 |
| **110** | 2.30 | 4300 | 55 | 115 | 140 | 280 | 240 | 268 | 140 | 120 | 8 | 156 | 205 | 12 | 1.0 | 1.1 | 1.0 | 106 |
| **125** | 2.88 | 4000 | 65 | 130 | 155 | 310 | 265 | 288 | 150 | 130 | 8 | 177 | 225 | 12 | 1.0 | 1.2 | 1.6 | 142 |
| **140** | 4.60 | 3700 | 75 | 150 | 170 | 340 | 295 | 330 | 170 | 150 | 10 | 200 | 250 | 10 | 1.0 | 1.5 | 2.95 | 195 |
| **160** | 6.48 | 3400 | 85 | 170 | 195 | 390 | 325 | 365 | 190 | 165 | 10 | 230 | 285 | 15 | 1.0 | 1.8 | 4.7 | 264 |
| **180** | 9.24 | 3100 | 120 | 190 | 225 | 435 | 370 | 422 | 220 | 190 | 12 | 261 | 325 | 18 | 1.0 | 3.0 | 9.0 | 400 |
| **200** | 12.92 | 2900 | 140 | 210 | 250 | 480 | 415 | 482 | 250 | 220 | 12 | 296 | 360 | 18 | 1.0 | 4.8 | 15.6 | 552 |
| **225** | 18.4 | 2700 | 160 | 240 | 280 | 545 | 465 | 539 | 280 | 245 | 14 | 338 | 410 | 21 | 1.0 | 7.4 | 28.2 | 790 |

Subject to change due to technical improvement.

# Curved Tooth Couplings

## Construction Series SBD

Dimension Table No. 243 137

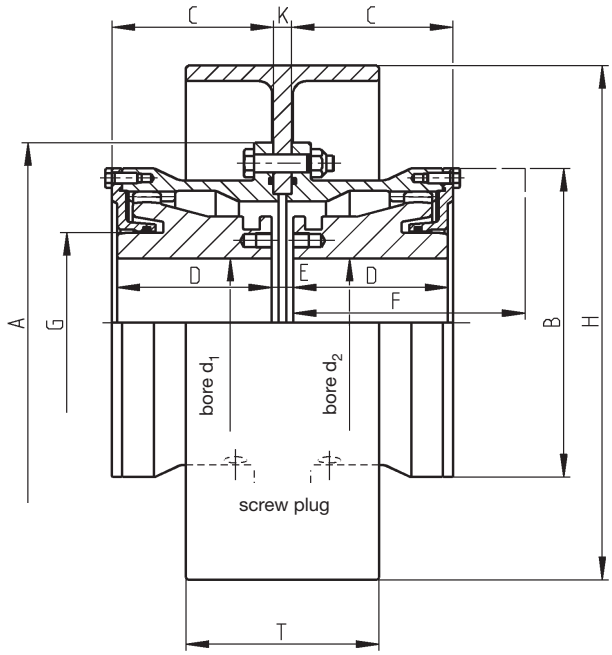


Fig. 2

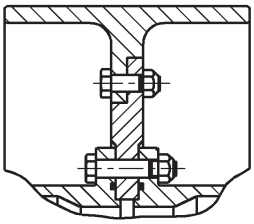

| Recommended brake disk allocation | | | |
|---|---|---|---|
| **Coupling size** | Brake disk ØH mm | mm | mm |
| **30** | 200 | 250 | |
| **40** | 200 | 250 | 315 |
| **50** | 200 | 250 | 315 |
| **60** | 250 | 315 | 400 |
| **70** | 250 | 315 | 400 |
| **80** | 315 | 400 | |
| **90** | 315 | 400 | 500 |
| **100** | 315 | 400 | 500 |
| **110** | 400 | 500 | 630 |
| **125** | 400 | 500 | 630 |
| **140** | 500 | 630 | 710 |
| **160** | 500 | 630 | 710 |
| **180** | 630 | 710 | |
| **200** | 630 | 710 | |

| Brake disk dimensions | | | Mass 4) moment of inertia | Weight 4) |
|---|---|---|---|---|
| ØH mm | T mm | K mm | kgm² | kg |
| 200 | 75 | 8 | 0.033 | 4.22 |
| 250 | 95 | 9 | 0.09 | 7.25 |
| 315 | 118 | 11 | 0.28 | 13.5 |
| 400 | 150 | 14 | 0.90 | 28 |
| 500 | 190 | 18 | 2.35 | 45 |
| 630 | 236 | 22 | 7.50 | 94 |
| 710 | 265 | 22 | 12.5 | 123 |

Split brake disks allow the vertical installation and removal of the machines.

Torsional stiffness values are contained in the data table for SB-type couplings.

The dismounting dimension F is required for the vertical installation and removal of the machines and for the replacement of the O-rings.

1) The speed $n_{max}$ depends on the circumferential speed of the brake disk. The specifications of the brake supplier have to be observed!

2) Based on a permissible angular misalignment of $\Delta K_{w\ perm.} = 1.5°$ per coupling half.

These values only apply to the couplings, not to the brake.

3) Values of the complete coupling, without brake disk, with $d_1$; $d_{2\ max.}$

4) Weights and mass moments of inertia are based on the largest coupling size allocated.

For coupling selection, please see page 6.

**Other sizes available on request.**

| Type SBD Size | Norm. cont. duty $\frac{P_{KN}}{n}$ kW·min | Speed 1) $n_{max.}$ rpm | Dimensions bore $d_1;d_2$ pre mm | min mm | max mm | A mm | B mm | C mm | D mm | E mm | F mm | G mm | Max. static radial mialign-ment $\Delta K_{max.}$ 2) mm | Total grease quantity kg | Total oil quantity litres | Mass 3) moment of inertia J kgm² | Weight 3) kg |
|---|---|---|---|---|---|---|---|---|---|---|---|---|---|---|---|---|---|
| **30** | 0.082 | 7500 | 10 | 12 | 32 | 118 | 92 | 53 | 50 | K+3 | 75 | 45 | ±1.95 | 0.085 | 0.027 | 0.007 | 4.4 |
| **40** | 0.146 | 6900 | 20 | 22 | 46 | 145 | 115 | 62.5 | 60 | K+2 | 90 | 60 | ±2.70 | 0.09 | 0.043 | 0.016 | 7.4 |
| **50** | 0.288 | 6300 | 20 | 22 | 58 | 165 | 135 | 72.5 | 70 | K+2 | 110 | 75 | ±3.00 | 0.17 | 0.070 | 0.029 | 11.1 |
| **60** | 0.50 | 5900 | 26 | 28 | 70 | 200 | 160 | 84.5 | 80 | K+3 | 120 | 90 | ±3.45 | 0.25 | 0.11 | 0.075 | 18.3 |
| **70** | 0.82 | 5400 | 26 | 28 | 78 | 220 | 178 | 93.5 | 90 | K+1 | 130 | 100 | ±3.90 | 0.35 | 0.15 | 0.13 | 25.4 |
| **80** | 1.14 | 5000 | 30 | 32 | 92 | 240 | 196 | 103.5 | 100 | K+1 | 150 | 120 | ±4.35 | 0.40 | 0.20 | 0.19 | 31.4 |
| **90** | 1.64 | 4700 | 30 | 32 | 100 | 270 | 225 | 115.5 | 110 | K+3 | 170 | 130 | ±4.80 | 0.60 | 0.30 | 0.37 | 46 |
| **100** | 2.30 | 4300 | 53 | 55 | 110 | 280 | 240 | 125.5 | 120 | K+3 | 180 | 140 | ±5.25 | 0.75 | 0.35 | 0.47 | 54 |
| **110** | 2.88 | 4000 | 63 | 65 | 120 | 310 | 265 | 135.0 | 130 | K+2 | 190 | 155 | ±5.70 | 1.0 | 0.45 | 0.81 | 72 |
| **125** | 4.60 | 3700 | 73 | 75 | 138 | 340 | 295 | 157.5 | 150 | K+5 | 215 | 175 | ±6.45 | 1.3 | 0.65 | 1.31 | 100 |
| **140** | 6.48 | 3400 | 83 | 85 | 156 | 390 | 325 | 172.5 | 165 | K+5 | 230 | 200 | ±7.20 | 1.6 | 0.85 | 2.35 | 140 |
| **160** | 9.24 | 3100 | 118 | 120 | 180 | 435 | 370 | 199.0 | 190 | K+6 | 270 | 230 | ±8.40 | 2.6 | 1.4 | 4.2 | 198 |
| **180** | 12.92 | 2900 | 138 | 140 | 200 | 480 | 415 | 225.0 | 220 | K+6 | 300 | 260 | ±9.60 | 3.3 | 1.8 | 7.4 | 283 |
| **200** | 18.4 | 2700 | 158 | 160 | 225 | 545 | 465 | 252.5 | 245 | K+7 | 340 | 290 | ±10.80 | 4.8 | 2.5 | 14 | 417 |

Subject to change due to technical improvement.

# Curved Tooth Couplings

## Construction Series SBT

Dimension Table No. 243 138

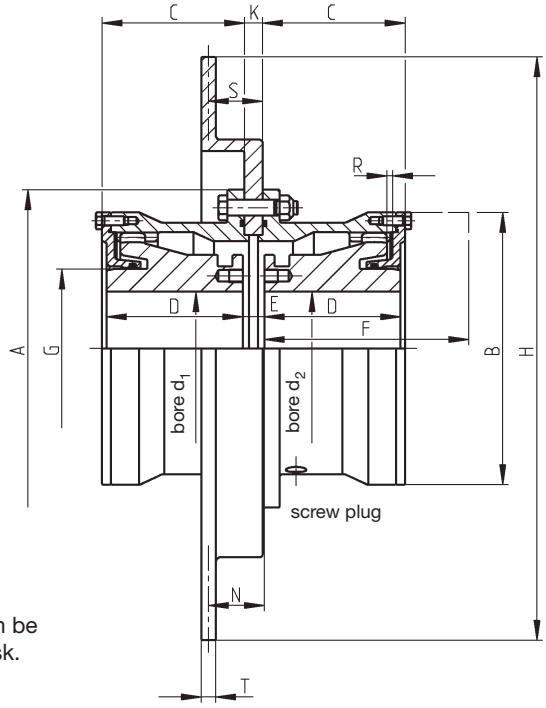


Fig. 2

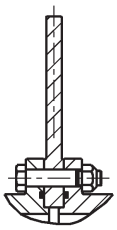

As an option, the couplings can be supplied with straight brake disk.

| Recommended brake disk allocation | | | | |
|---|---|---|---|---|
| **Coupling size** | Brake disk ØH (nominal dimension) mm | mm | mm | mm |
| **30** | 300 | | | |
| **40** | 300 | | | |
| **50** | 350 | | | |
| **60** | 400 | 460 | 515 | |
| **70** | 400 | 460 | 515 | |
| **80** | 460 | 515 | 610 | |
| **90** | 460 | 515 | 610 | 710 |
| **100** | 515 | 610 | 710 | |
| **110** | 515 | 610 | 710 | 810 |
| **125** | 610 | 710 | 810 | |
| **140** | 610 | 710 | 810 | 915 |
| **160** | 710 | 810 | 915 | |
| **180** | 710 | 810 | 915 | |
| **200** | 810 | 915 | | |

| Brake disk dimensions ØH mm | T mm | K mm | S mm | Mass 4) moment of inertia kgm² | Weight 4) kg |
|---|---|---|---|---|---|
| 300 | 12.7 | 8 | 34.65 | 0.099 | 6.7 |
| 356 | 12.7 | 10 | 47.65 | 0.19 | 10 |
| 406 | 12.7 | 13 | 47.65 | 0.30 | 12 |
| 457 | 12.7 | 16 | 47.65 | 0.48 | 16 |
| 514 | 12.7 | 16 | 47.65 | 0.57 | 20 |
| 610 | 12.7 | 16 | 47.65 | 1.5 | 26 |
| 711 | 12.7 | 18 | 47.65 | 2.9 | 39 |
| 812 | 12.7 | 23 | 47.65 | 5.8 | 61 |
| 915 | 12.7 | 23 | 47.65 | 10.0 | 92 |

The dismounting dimension F is required to allow the vertical installation and removal of the machines and O-ring replacement.

1) The speed $n_{max}$ depends on the permissible circumferential speed of the brake disk. The specifications of the brake supplier have to be observed!

2) Based on a permissible angular misalignment of $\Delta K_{w\ perm.} = 1.5°$ per coupling half.
These values only apply to the couplings, not to the brake.

3) Values for the complete coupling, without brake disk, with bore $d_1$; $d_{2\ max.}$

4) Weights and mass moments of inertia are based on the largest coupling size allocated.

5) The axial clearances have to be checked in relation to the brake calipers.

Torsional stiffness values are contained in the data table for SB-type couplings.

For coupling selection, please see page 6.

**Other sizes available on request.**

| Type SBT Size | Norm. cont. duty $\frac{P_{KN}}{n}$ kW·min | Speed 1) $n_{max.}$ rpm | Dimensions bore $d_1;d_2$ pre mm | min mm | max mm | A mm | B mm | C mm | D mm | E mm | F mm | G mm | N mm | R5) mm | Max. static radial misalign- mm | Total grease quantity kg | Total oil quantity litres | Mass 3) moment of inertia J kgm² | Weight 3) kg |
|---|---|---|---|---|---|---|---|---|---|---|---|---|---|---|---|---|---|---|---|
| **30** | 0.082 | 7500 | 10 | 12 | 32 | 118 | 92 | 53 | 50 | K+ 3 | 75 | 45 | 36.15 | 2 | ±1.95 | 0.09 | 0.03 | 0.007 | 4.4 |
| **40** | 0.146 | 6900 | 20 | 22 | 46 | 145 | 115 | 62.5 | 60 | K+ 3 | 90 | 60 | 36.15 | 2 | ±2.70 | 0.09 | 0.04 | 0.016 | 7.4 |
| **50** | 0.288 | 6300 | 20 | 22 | 58 | 165 | 135 | 72.5 | 70 | K+ 4 | 110 | 75 | 49.65 | 2 | ±3.00 | 0.17 | 0.07 | 0.029 | 11.1 |
| **60** | 0.50 | 5900 | 26 | 28 | 70 | 200 | 160 | 84.5 | 80 | K+ 5 | 120 | 90 | 50.15 | 2 | ±3.45 | 0.25 | 0.11 | 0.075 | 18.3 |
| **70** | 0.82 | 5400 | 26 | 28 | 78 | 220 | 178 | 93.5 | 90 | K+ 5 | 130 | 100 | 50.15 | 2 | ±3.90 | 0.35 | 0.15 | 0.13 | 25.4 |
| **80** | 1.14 | 5000 | 30 | 32 | 92 | 240 | 196 | 103.5 | 100 | K+ 5 | 150 | 120 | 50.15 | 2 | ±4.35 | 0.40 | 0.20 | 0.19 | 31.4 |
| **90** | 1.64 | 4700 | 30 | 32 | 100 | 270 | 225 | 115.5 | 110 | K+ 5 | 170 | 130 | 50.15 | 3 | ±4.80 | 0.60 | 0.30 | 0.37 | 46 |
| **100** | 2.30 | 4300 | 53 | 55 | 110 | 280 | 240 | 125.5 | 120 | K+ 7 | 180 | 140 | 51.15 | 3 | ±5.25 | 0.75 | 0.35 | 0.47 | 54 |
| **110** | 2.88 | 4000 | 63 | 65 | 120 | 310 | 265 | 135.0 | 130 | K+ 6 | 190 | 155 | 50.65 | 3 | ±5.70 | 1.0 | 0.45 | 0.81 | 72 |
| **125** | 4.60 | 3700 | 73 | 75 | 138 | 340 | 295 | 157.5 | 150 | K+11 | 215 | 175 | 53.15 | 3 | ±6.45 | 1.3 | 0.65 | 1.31 | 100 |
| **140** | 6.48 | 3400 | 83 | 85 | 156 | 390 | 325 | 172.5 | 165 | K+11 | 230 | 200 | 53.15 | 3 | ±7.20 | 1.6 | 0.85 | 2.35 | 140 |
| **160** | 9.24 | 3100 | 118 | 120 | 180 | 435 | 370 | 199.0 | 190 | K+14 | 270 | 230 | 54.65 | 3 | ±8.40 | 2.6 | 1.4 | 4.2 | 198 |
| **180** | 12.92 | 2900 | 138 | 140 | 200 | 480 | 415 | 225.0 | 220 | K+16 | 300 | 260 | 55.65 | 3 | ±9.60 | 3.3 | 1.8 | 7.4 | 283 |
| **200** | 18.4 | 2700 | 158 | 160 | 225 | 545 | 465 | 252.5 | 245 | K+19 | 340 | 290 | 57.15 | 4 | ±10.80 | 4.8 | 2.5 | 14 | 417 |

Subject to change due to technical improvement.

# Curved Tooth Couplings

## Construction Series SBkD

Dimension Table No. 243 139

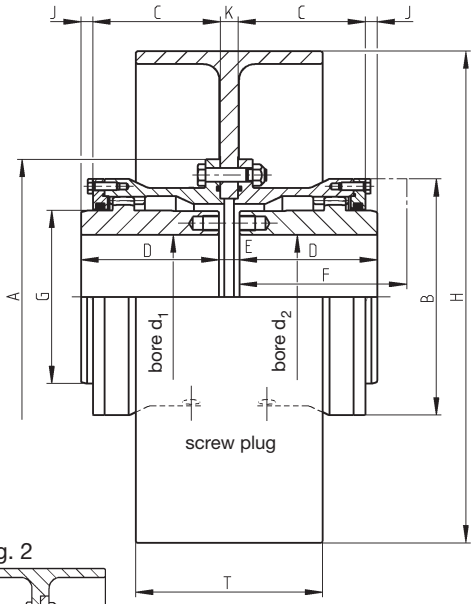


Fig. 2

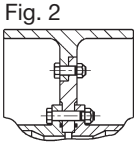

Hub configuration II

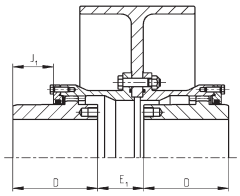


Hub configuration III

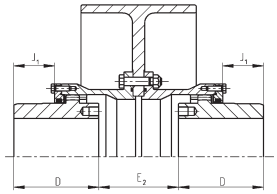


The constructional design of the SBkD series allows different hub configurations in the sleeve, so that larger shaft distances are possible. With tapered bores, the extended E-dimension provides space for the installation of shaft nuts.

| Recommended brake disk allocation | | | |
|---|---|---|---|
| **Coupling size** | Brake disk ØH mm | mm | mm |
| **38** | 200 | 250 | |
| **48** | 200 | 250 | 315 |
| **60** | 200 | 250 | 315 |
| **70** | 250 | 315 | 400 |
| **80** | 315 | 400 | |
| **90** | 315 | 400 | |
| **100** | 400 | 500 | |
| **110** | 400 | 500 | |
| **125** | 400 | 500 | 630 |
| **140** | 400 | 500 | 630 |
| **160** | 500 | 630 | 710 |
| **180** | 500 | 630 | 710 |
| **200** | 630 | 710 | |
| **225** | 710 | | |

| Brake disk dimensions | | | Mass 4) moment of inertia | Weight 4) |
|---|---|---|---|---|
| ØH mm | T mm | K mm | kgm² | kg |
| 200 | 75 | 8 | 0.033 | 4.22 |
| 250 | 95 | 9 | 0.09 | 7.25 |
| 315 | 118 | 11 | 0.28 | 13.5 |
| 400 | 150 | 14 | 0.90 | 28 |
| 500 | 190 | 18 | 2.35 | 45 |
| 630 | 236 | 22 | 7.50 | 94 |
| 710 | 265 | 22 | 12.5 | 123 |

Split brake disks allow the vertical installation and removal of the machines.

Torsional stiffness values are contained in the data table for SBk-type couplings.

The dismounting dimension F is required for the vertical installation and removal of the machines and O-ring replacement.

For coupling selection,
please see page 6.

**Other sizes available on request.**

1) The speed $n_{max}$ depends on the permissible circumferential speed of the brake disk. The specifications of the brake supplier have to be observed!

The maximum speed is determined by the misalignment.

Please see table 'Speed Factors'.

2) Based on a permissible angular misalignment of $\Delta K_{w\ perm.} = 0.75°$ per coupling half.

These values only apply to the couplings, not to the brake.

3) Values of the complete coupling, without brake disk, with bore $d_1$; $d_{2\ max.}$

4) Weights and mass moments of inertia are based on the largest coupling size allocated.

| Type SBkD Size | Norm. cont. duty $\frac{P_{KN}}{n}$ kW·min | Speed 1) $n_{max.}$ rpm | bore $d_1;d_2$ min mm | max mm | A mm | B mm | C mm | D mm | E mm | $E_1$ mm | $E_2$ mm | F mm | G mm | J mm | $J_1$ mm | Max. static radial misalignment $\Delta K_{max.}$ 2) mm | Total grease quantity kg | Mass 3) moment of inertia J kgm² | Weight 3) kg |
|---|---|---|---|---|---|---|---|---|---|---|---|---|---|---|---|---|---|---|---|
| **38** | 0.082 | 7500 | 12 | 42 | 118 | 92 | 56.5 | 60 | K+3 | K+ 15 | K+ 27 | 90 | 60.0 | 5.0 | 17.0 | ±1.01 | 0.11 | 0.007 | 4.2 |
| **48** | 0.146 | 6900 | 22 | 55 | 145 | 115 | 66.0 | 70 | K+2 | K+ 23 | K+ 44 | 100 | 77.0 | 5.0 | 26.0 | ±1.26 | 0.12 | 0.017 | 7.8 |
| **60** | 0.288 | 6300 | 22 | 65 | 165 | 135 | 76.0 | 80 | K+3 | K+ 30 | K+ 57 | 110 | 90.0 | 5.5 | 32.5 | ±1.50 | 0.20 | 0.035 | 11.7 |
| **70** | 0.50 | 5900 | 28 | 80 | 200 | 160 | 87.5 | 90 | K+3 | K+ 39 | K+ 75 | 120 | 112.5 | 4 | 40 | ±1.73 | 0.28 | 0.085 | 19.8 |
| **80** | 0.82 | 5400 | 28 | 92 | 220 | 178 | 96.5 | 100 | K+1 | K+ 43 | K+ 85 | 130 | 128.0 | 4 | 46 | ±1.95 | 0.45 | 0.13 | 26.5 |
| **90** | 1.14 | 5000 | 32 | 105 | 240 | 196 | 106.5 | 110 | K+3 | K+ 51 | K+ 99 | 140 | 145.0 | 5 | 53 | ±2.25 | 0.65 | 0.21 | 32.5 |
| **100** | 1.64 | 4700 | 32 | 115 | 270 | 225 | 119.5 | 125 | K+3 | K+ 54 | K+105 | 150 | 160.5 | 7 | 58 | ±2.40 | 0.80 | 0.40 | 46 |
| **110** | 2.30 | 4300 | 55 | 126 | 280 | 240 | 129.5 | 140 | K+3 | K+ 57 | K+111 | 170 | 176.0 | 12 | 66 | ±2.70 | 0.95 | 0.53 | 57 |
| **125** | 2.88 | 4000 | 65 | 145 | 310 | 265 | 139.0 | 150 | K+4 | K+ 62 | K+120 | 180 | 200.5 | 13 | 71 | ±2.85 | 1.3 | 0.84 | 59 |
| **140** | 4.60 | 3700 | 75 | 162 | 340 | 295 | 162.5 | 170 | K+5 | K+ 75 | K+145 | 200 | 224.5 | 10 | 80 | ±3.30 | 1.6 | 1.5 | 111 |
| **160** | 6.48 | 3400 | 85 | 185 | 390 | 325 | 177.5 | 190 | K+7 | K+ 79 | K+151 | 230 | 256.5 | 16 | 88 | ±3.60 | 2.0 | 2.6 | 153 |
| **180** | 9.24 | 3100 | 120 | 210 | 435 | 370 | 205.0 | 220 | K+6 | K+ 94 | K+182 | 260 | 288.5 | 18 | 106 | ±4.20 | 3.4 | 4.7 | 217 |
| **200** | 12.92 | 2900 | 140 | 230 | 480 | 415 | 235.0 | 250 | K+8 | K+110 | K+212 | 300 | 320.5 | 19 | 121 | ±4.80 | 4.4 | 8.1 | 303 |
| **225** | 18.4 | 2700 | 160 | 260 | 545 | 465 | 262.5 | 280 | K+9 | K+121 | K+233 | 330 | 362.0 | 22 | 134 | ±5.40 | 6.6 | 15.2 | 442 |

Subject to change due to technical improvement.

# Curved Tooth Couplings

## Construction Series SBkT

Dimension Table No. 243 140

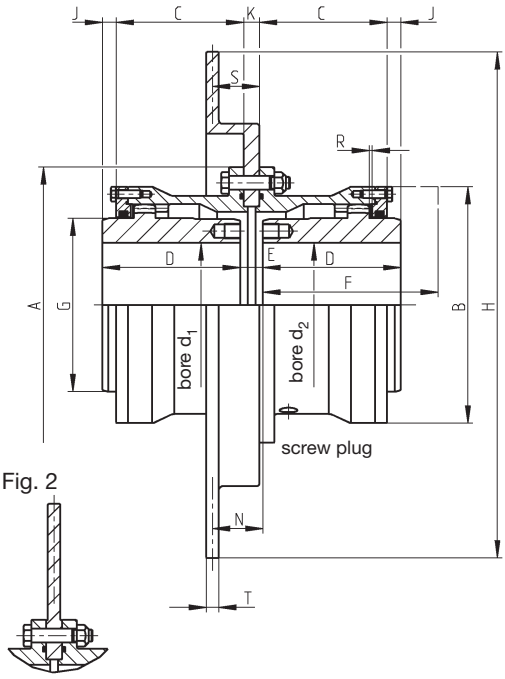


Fig. 2



As an option, the couplings can be supplied with straight brake disk.

Hub configuration II

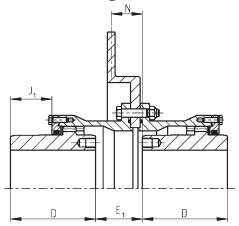


Hub configuration III

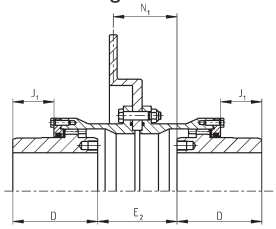


The constructional design of the SBkT series allows different hub configurations in the sleeve, so that larger shaft distances are possible. With tapered bores, the extended E-dimension provides space for the installation of shaft nuts.

| Recommended brake disk allocation | | | | |
|---|---|---|---|---|
| **Coupling size** | Brake disk ØH (nominal dimension) mm | mm | mm | mm |
| **38** | 300 | | | |
| **48** | 300 | | | |
| **60** | 350 | | | |
| **70** | 400 | 460 | 515 | |
| **80** | 400 | 460 | 515 | |
| **90** | 460 | 515 | 610 | |
| **100** | 460 | 515 | 610 | 710 |
| **110** | 515 | 610 | 710 | |
| **125** | 515 | 610 | 710 | 810 |
| **140** | 610 | 710 | 810 | |
| **160** | 610 | 710 | 810 | 915 |
| **180** | 710 | 810 | 915 | |
| **200** | 710 | 810 | 915 | |
| **225** | 810 | 915 | | |

| Brake disk dimensions ØH mm | T mm | K mm | S mm | Mass 4) moment of inertia kgm² | Weight 4) kg |
|---|---|---|---|---|---|
| 300 | 12.7 | 8 | 34.65 | 0.099 | 6.7 |
| 356 | 12.7 | 10 | 47.65 | 0.19 | 10 |
| 406 | 12.7 | 13 | 47.65 | 0.30 | 12 |
| 457 | 12.7 | 16 | 47.65 | 0.48 | 16 |
| 514 | 12.7 | 16 | 47.65 | 0.57 | 20 |
| 610 | 12.7 | 16 | 47.65 | 1.5 | 26 |
| 711 | 12.7 | 18 | 47.65 | 2.9 | 39 |
| 812 | 12.7 | 23 | 47.65 | 5.8 | 61 |
| 915 | 12.7 | 23 | 47.65 | 10.0 | 92 |

For coupling selection, please see page 6.

1) The speed $n_{max}$ depends on the permissible circumferential speed of the brake disk. The specifications of the brake supplier have to be observed!

The maximum speed capacity is determined by the misalignment. Please see table 'Speed Factors'.

**Other sizes available on request.**

2) Based on a permissible angular misalignment of $\Delta K_{w\ perm.} = 0{,}75°$ per coupling half.

These values only apply to the couplings, not to the brake.

3) Values of the complete coupling, without brake disk, with bore $d_1$; $d_{2\ max.}$

4) Values are based on the largest coupling size allocated.

5) The axial clearances have to be checked in relation to the brake calipers.

The dismounting dimension F is required for the vertical installation and removal of the machines and O-ring replacement.

Torsional stiffness values are contained in the data table for SBk-type couplings.

| Type SBkT Size | Norm. cont. duty $P_{KN}/n$ kW·min | Speed 1) $n_{max.}$ rpm | Dimensions bore $d_1;d_2$ min mm | max mm | A mm | B mm | C mm | D mm | E mm | $E_1$ mm | $E_2$ mm | F mm | G mm | J mm | $J_1$ mm | N mm | $N_1$ mm | R5) mm | Max. static radial misalignment $\Delta K_{max.}$ 2) mm | Total grease quantity kg | Mass 3) moment of inertia J kgm² | Weight 3) kg |
|---|---|---|---|---|---|---|---|---|---|---|---|---|---|---|---|---|---|---|---|---|---|---|
| **38** | 0.082 | 7500 | 12 | 42 | 118 | 92 | 56.5 | 60 | K+ 3 | K+ 15 | K+ 27 | 90 | 60.0 | 5.0 | 17.0 | 36.15 | 48.15 | 2 | ±1.01 | 0.11 | 0.007 | 4.2 |
| **48** | 0.146 | 6900 | 22 | 55 | 145 | 115 | 66.0 | 70 | K+ 3 | K+ 24 | K+ 45 | 100 | 77.0 | 5.5 | 26.5 | 36.15 | 57.15 | 2 | ±1.26 | 0.12 | 0.017 | 7.8 |
| **60** | 0.288 | 6300 | 22 | 65 | 165 | 135 | 76.0 | 80 | K+ 5 | K+ 32 | K+ 59 | 110 | 90.0 | 6.5 | 33.5 | 50.15 | 77.15 | 2 | ±1.50 | 0.20 | 0.035 | 11.7 |
| **70** | 0.50 | 5900 | 28 | 80 | 200 | 160 | 87.5 | 90 | K+ 5 | K+ 41 | K+ 77 | 120 | 112.5 | 5.0 | 41 | 50.15 | 86.15 | 2 | ±1.73 | 0.28 | 0.085 | 19.8 |
| **80** | 0.82 | 5400 | 28 | 92 | 220 | 178 | 96.5 | 100 | K+ 5 | K+ 47 | K+ 89 | 130 | 128.0 | 6.0 | 48 | 50.15 | 92.15 | 2 | ±1.95 | 0.45 | 0.13 | 26.5 |
| **90** | 1.14 | 5000 | 32 | 105 | 240 | 196 | 106.5 | 110 | K+ 7 | K+ 55 | K+103 | 140 | 145.0 | 7.0 | 55 | 51.15 | 99.15 | 2 | ±2.25 | 0.65 | 0.21 | 32.5 |
| **100** | 1.64 | 4700 | 32 | 115 | 270 | 225 | 119.5 | 125 | K+ 5 | K+ 56 | K+107 | 150 | 160.5 | 8.0 | 59 | 50.15 | 101.15 | 3 | ±2.40 | 0.80 | 0.40 | 46 |
| **110** | 2.30 | 4300 | 55 | 126 | 280 | 240 | 129.5 | 140 | K+ 7 | K+ 61 | K+115 | 170 | 176.0 | 14 | 68 | 51.15 | 105.15 | 3 | ±2.70 | 0.95 | 0.53 | 57 |
| **125** | 2.88 | 4000 | 65 | 145 | 310 | 265 | 139.0 | 150 | K+ 8 | K+ 66 | K+124 | 180 | 200.5 | 15 | 73 | 51.65 | 109.65 | 3 | ±2.85 | 1.3 | 0.84 | 59 |
| **140** | 4.60 | 3700 | 75 | 162 | 340 | 295 | 162.5 | 170 | K+11 | K+ 81 | K+151 | 200 | 224.5 | 13 | 83 | 53.15 | 123.15 | 3 | ±3.30 | 1.6 | 1.5 | 111 |
| **160** | 6.48 | 3400 | 85 | 185 | 390 | 325 | 177.5 | 190 | K+15 | K+ 87 | K+159 | 230 | 256.5 | 20 | 92 | 55.15 | 127.15 | 3 | ±3.60 | 2.0 | 2.6 | 153 |
| **180** | 9.24 | 3100 | 120 | 210 | 435 | 370 | 205.0 | 220 | K+14 | K+102 | K+190 | 260 | 288.5 | 22 | 110 | 54.65 | 142.65 | 3 | ±4.20 | 3.4 | 4.7 | 217 |
| **200** | 12.92 | 2900 | 140 | 230 | 480 | 415 | 235.0 | 250 | K+18 | K+120 | K+222 | 300 | 320.5 | 24 | 126 | 56.65 | 158.65 | 3 | ±4.80 | 4.4 | 8.1 | 303 |
| **225** | 18.4 | 2700 | 160 | 260 | 545 | 465 | 262.5 | 280 | K+21 | K+133 | K+245 | 330 | 362.0 | 28 | 140 | 58.15 | 170.15 | 4 | ±5.40 | 6.6 | 15.2 | 442 |

Subject to change due to technical improvement.


RENK Aktiengesellschaft, Rheine Works · Phone: +49 5971 790 0 · Fax: +49 5971 790 208 and 790 256

# Curved Tooth Couplings

## Construction Series LBkD

Dimension Table No. 243 141

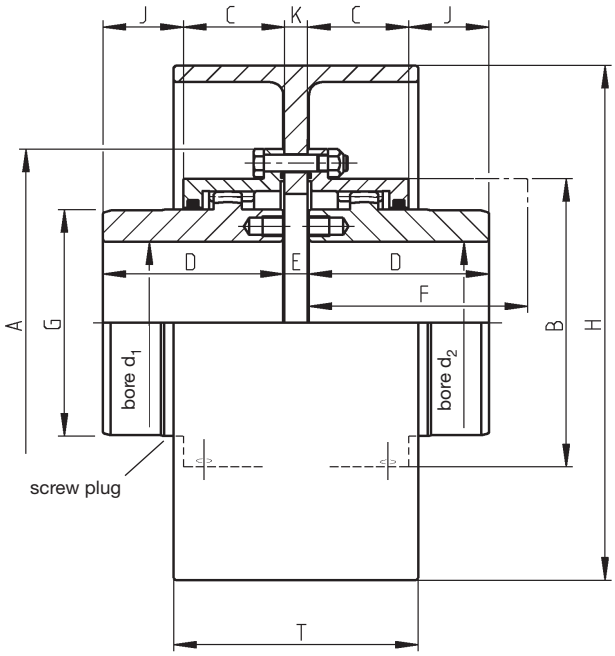


Fig. 2

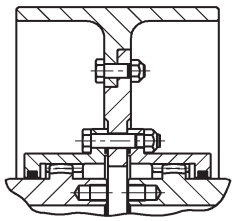

| Recommended brake disk allocation | | | |
|---|---|---|---|
| **Coupling size** | Brake disk ØH mm | mm | mm |
| **32** | 200 | | |
| **38** | 200 | 250 | |
| **48** | 200 | 250 | 315 |
| **60** | 200 | 250 | 315 |
| **70** | 250 | 315 | 400 |
| **80** | 315 | 400 | |
| **90** | 315 | 400 | |
| **100** | 400 | 500 | |
| **110** | 400 | 500 | |
| **125** | 400 | 500 | 630 |
| **140** | 400 | 500 | 630 |
| **160** | 500 | 630 | 710 |
| **180** | 500 | 630 | 710 |
| **200** | 630 | 710 | |
| **225** | 710 | | |

| Brake disk dimensions | | | Mass 4) moment of inertia | Weight 4) |
|---|---|---|---|---|
| ØH mm | T mm | K mm | kgm² | kg |
| 200 | 75 | 8 | 0.033 | 4.22 |
| 250 | 95 | 9 | 0.09 | 7.25 |
| 315 | 118 | 11 | 0.28 | 13.5 |
| 400 | 150 | 14 | 0.90 | 28 |
| 500 | 190 | 18 | 2.35 | 45 |
| 630 | 236 | 22 | 7.50 | 94 |
| 710 | 265 | 22 | 12.5 | 123 |

Split brake disks allow the vertical installation and removal of the machines.

The dismounting dimension F is required for the vertical installation and removal of the machines and O-ring replacement.

For coupling selection, please see page 6.

**Other sizes available on request.**

1) The speed $n_{max}$ depends on the permissible circumferential speed of the brake disk. The specifications of the brake supplier have to be observed!

2) Based on a permissible angular misalignment of $\Delta K_{w\ perm.} = 0.75°$ per coupling half.

These values only apply to the couplings, not to the brake.

3) Values for the complete coupling, without brake disk, with bore $d_1$; $d_{2\ max.}$

4) Weights and mass moments of inertia are based on the largest coupling size allocated.

Torsional stiffness values are given in the data table for LBk-type couplings.

| Type LBkD Size | Norm. cont. duty $P_{KN}/n$ kW·min | Speed 1) $n_{max.}$ rpm | bore $d_1;d_2$ min mm | max mm | Dimensions A mm | B mm | C mm | D mm | E mm | F mm | G mm | J mm | Max. static radial misalignment $\Delta K_{max.}$ 2) mm | Total grease quantity kg | Mass3) moment of inertia J kgm² | Weight 3) kg |
|---|---|---|---|---|---|---|---|---|---|---|---|---|---|---|---|---|
| **32** | 0.050 | 8500 | 12 | 35 | 105 | 74 | 44.5 | 50 | K+ 2 | 80 | 48 | 7.0 | ±0.57 | 0.03 | 0.003 | 2.9 |
| **38** | 0.082 | 7500 | 12 | 42 | 115 | 87 | 50.0 | 60 | K+ 3 | 90 | 60 | 12.0 | ±0.69 | 0.04 | 0.006 | 4.3 |
| **48** | 0.146 | 6900 | 22 | 55 | 145 | 108 | 50.0 | 70 | K+ 3 | 100 | 77 | 21.5 | ±0.71 | 0.06 | 0.015 | 7.0 |
| **60** | 0.288 | 6300 | 22 | 65 | 165 | 125 | 52.5 | 80 | K+ 4 | 110 | 90 | 29.5 | ±0.77 | 0.10 | 0.026 | 9.3 |
| **70** | 0.50 | 5900 | 28 | 80 | 195 | 146 | 54.5 | 90 | K+ 3 | 120 | 112 | 37.0 | ±0.78 | 0.15 | 0.059 | 14.7 |
| **80** | 0.82 | 5400 | 28 | 92 | 215 | 168 | 58.0 | 100 | K+ 3 | 130 | 128 | 43.5 | ±0.84 | 0.22 | 0.097 | 20.0 |
| **90** | 1.14 | 5000 | 32 | 105 | 230 | 185 | 62.0 | 110 | K+ 5 | 140 | 145 | 50.5 | ±0.92 | 0.29 | 0.14 | 25.4 |
| **100** | 1.64 | 4700 | 32 | 115 | 265 | 210 | 72.0 | 125 | K+ 4 | 150 | 160 | 55.0 | ±1.08 | 0.44 | 0.28 | 38.0 |
| **110** | 2.30 | 4300 | 55 | 126 | 270 | 224 | 78.5 | 140 | K+ 4 | 170 | 176 | 63.5 | ±1.23 | 0.55 | 0.36 | 45.6 |
| **125** | 2.88 | 4000 | 65 | 145 | 305 | 245 | 85.5 | 150 | K+ 6 | 180 | 200 | 67.5 | ±1.34 | 0.79 | 0.64 | 62 |
| **140** | 4.60 | 3700 | 75 | 162 | 330 | 270 | 96.5 | 170 | K+ 6 | 200 | 224 | 76.5 | ±1.44 | 0.90 | 1.03 | 82 |
| **160** | 6.48 | 3400 | 85 | 185 | 375 | 305 | 108.0 | 190 | K+ 7 | 230 | 256 | 85.5 | ±1.70 | 1.23 | 1.5 | 93 |
| **180** | 9.24 | 3100 | 120 | 210 | 425 | 348 | 122.0 | 220 | K+ 6 | 260 | 288 | 101.0 | ±1.89 | 1.9 | 3.6 | 177 |
| **200** | 12.92 | 2900 | 140 | 230 | 470 | 392 | 133.0 | 250 | K+ 8 | 300 | 320 | 121.0 | ±2.12 | 2.4 | 6.2 | 245 |
| **225** | 18.4 | 2700 | 160 | 260 | 535 | 437 | 154.5 | 280 | K+10 | 330 | 362 | 130.5 | ±2.42 | 3.7 | 11.2 | 347 |

Subject to change due to technical improvement.

# Curved Tooth Couplings

## Construction Series LBkT

Dimension Table No. 243 142

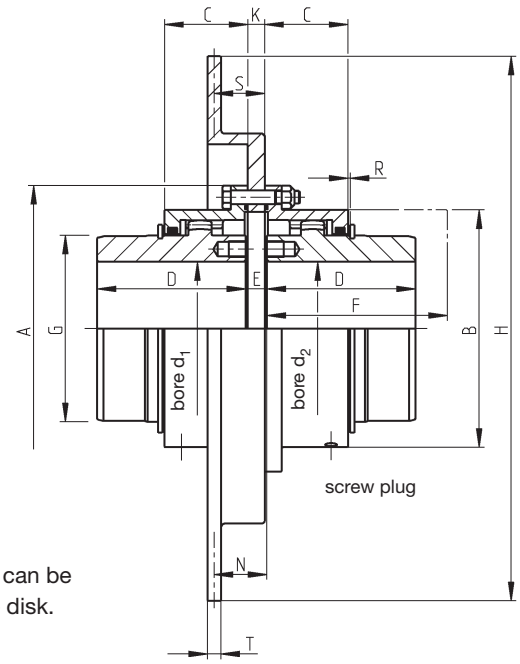


Fig. 2

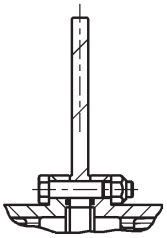

As an option, the couplings can be supplied with straight brake disk.

The dismounting dimension F is required for the vertical installation and removal of the machines and O-ring replacement.

Torsional stiffness values are contained in the data table for LBk-type couplings.

For coupling selection, please see page 6.

**Other sizes available on request.**

1) The speed $n_{max}$ depends on the circumferential speed of the brake disk. The specifications of the brake supplier have to be observed!

2) Based on a permissible angular misalignment of $\Delta K_{w\ perm.} = 0.75°$ per coupling half.

These values only apply to the couplings, not to the brake.

3) Values for the complete coupling, without brake disk, with bore $d_1$; $d_{2\ max.}$

4) Weights and mass moments of inertia are based on the largest coupling size allocated.

5) The axial clearances have to be checked in relation to the brake calipers.

| Recommended brake disk allocation | | | | |
|---|---|---|---|---|
| **Coupling size** | Brake disk ØH (nominal dimension) mm | mm | mm | mm |
| **32** | 300 | | | |
| **38** | 300 | | | |
| **48** | 300 | | | |
| **60** | 350 | | | |
| **70** | 400 | 460 | 515 | |
| **80** | 400 | 460 | 515 | |
| **90** | 460 | 515 | 610 | |
| **100** | 460 | 515 | 610 | 710 |
| **110** | 515 | 610 | 710 | |
| **125** | 515 | 610 | 710 | 810 |
| **140** | 610 | 710 | 810 | |
| **160** | 610 | 710 | 810 | 915 |
| **180** | 710 | 810 | 915 | |
| **200** | 710 | 810 | 915 | |
| **225** | 810 | 915 | | |

| Brake disk dimensions ØH mm | T mm | K mm | S mm | Mass 4) moment of inertia kgm² | Weight 4) kg |
|---|---|---|---|---|---|
| 300 | 12.7 | 8 | 34.65 | 0.098 | 6.7 |
| 356 | 12.7 | 10 | 47.65 | 0.19 | 10 |
| 406 | 12.7 | 13 | 47.65 | 0.30 | 12 |
| 457 | 12.7 | 16 | 47.65 | 0.48 | 16 |
| 514 | 12.7 | 16 | 47.65 | 0.57 | 20 |
| 610 | 12.7 | 16 | 47.65 | 1.5 | 26 |
| 711 | 12.7 | 18 | 47.65 | 2.9 | 39 |
| 812 | 12.7 | 23 | 47.65 | 5.8 | 61 |
| 915 | 12.7 | 23 | 47.65 | 10.0 | 92 |

| Type LBkT Size | Norm. cont. duty $\frac{P_{KN}}{n}$ kW·min | Speed 1) $n_{max.}$ rpm | Dimensions bore $d_1;d_2$ min mm | max mm | A mm | B mm | C mm | D mm | E mm | F mm | G mm | N mm | R5) mm | Max. static radial misalignment $\Delta K_{max.}$ 2) mm | Total grease quantity kg | Mass 3) moment of inertia J kgm² | Weight 3) kg |
|---|---|---|---|---|---|---|---|---|---|---|---|---|---|---|---|---|---|
| **32** | 0.050 | 8500 | 12 | 35 | 105 | 74 | 44.5 | 50 | K+ 2 | 80 | 48 | 35.65 | 1.5 | ±0.57 | 0.03 | 0.003 | 2.9 |
| **38** | 0.082 | 7500 | 12 | 42 | 115 | 87 | 50.0 | 60 | K+ 3 | 90 | 60 | 36.15 | 1.5 | ±0.69 | 0.04 | 0.006 | 4.3 |
| **48** | 0.146 | 6900 | 22 | 55 | 145 | 108 | 50.0 | 70 | K+ 3 | 100 | 77 | 36.15 | 2 | ±0.71 | 0.06 | 0.015 | 7.0 |
| **60** | 0.288 | 6300 | 22 | 65 | 165 | 125 | 52.5 | 80 | K+ 4 | 110 | 90 | 49.65 | 2 | ±0.77 | 0.10 | 0.026 | 9.3 |
| **70** | 0.50 | 5900 | 28 | 80 | 195 | 146 | 54.5 | 90 | K+ 3 | 120 | 112 | 49.15 | 2 | ±0.78 | 0.15 | 0.059 | 14.7 |
| **80** | 0.82 | 5400 | 28 | 92 | 215 | 168 | 58.0 | 100 | K+ 3 | 130 | 128 | 49.15 | 2 | ±0.84 | 0.22 | 0.097 | 20.0 |
| **90** | 1.14 | 5000 | 32 | 105 | 230 | 185 | 62.0 | 110 | K+ 5 | 140 | 145 | 50.15 | 2 | ±0.92 | 0.29 | 0.14 | 25.4 |
| **100** | 1.64 | 4700 | 32 | 115 | 265 | 210 | 72.0 | 125 | K+ 4 | 150 | 160 | 49.65 | 3 | ±1.08 | 0.44 | 0.28 | 38.0 |
| **110** | 2.30 | 4300 | 55 | 126 | 270 | 224 | 78.5 | 140 | K+ 4 | 170 | 176 | 49.65 | 3 | ±1.23 | 0.55 | 0.36 | 45.6 |
| **125** | 2.88 | 4000 | 65 | 145 | 305 | 245 | 85.5 | 150 | K+ 6 | 180 | 200 | 50.65 | 3 | ±1.34 | 0.79 | 0.64 | 62 |
| **140** | 4.60 | 3700 | 75 | 162 | 330 | 270 | 96.5 | 170 | K+ 6 | 200 | 224 | 50.65 | 3 | ±1.44 | 0.90 | 1.03 | 82 |
| **160** | 6.48 | 3400 | 85 | 185 | 375 | 305 | 108.0 | 190 | K+ 7 | 230 | 256 | 51.15 | 3 | ±1.70 | 1.23 | 1.5 | 93 |
| **180** | 9.24 | 3100 | 120 | 210 | 425 | 348 | 122.0 | 220 | K+ 6 | 260 | 288 | 50.65 | 3 | ±1.89 | 1.9 | 3.6 | 177 |
| **200** | 12.92 | 2900 | 140 | 230 | 470 | 392 | 133.0 | 250 | K+ 8 | 300 | 320 | 51.65 | 3 | ±2.12 | 2.4 | 6.2 | 245 |
| **225** | 18.4 | 2700 | 160 | 260 | 535 | 437 | 154.5 | 280 | K+10 | 330 | 362 | 52.65 | 3 | ±2.42 | 3.7 | 11.2 | 347 |

Subject to change due to technical improvement.


RENK Aktiengesellschaft, Rheine Works · Phone: +49 5971 790 0 · Fax: +49 5971 790 208 and 790 256

# Curved Tooth Couplings

## Construction Series VSB

Dimension Table No. 243 143

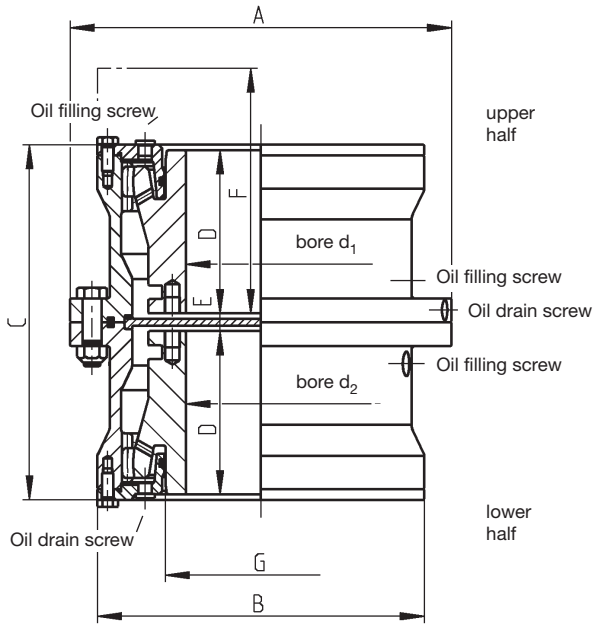


| Coupling size | Required oil quantity for oil lubrication min. speed upper half litres | min. speed lower half litres | max. speed upper half litres | max. speed lower half litres |
|---|---|---|---|---|
| **30** | 0.070 | 0.016 | 0.04 | 0.016 |
| **40** | 0.095 | 0.025 | 0.05 | 0.025 |
| **50** | 0.17 | 0.07 | 0.06 | 0.07 |
| **60** | 0.29 | 0.11 | 0.13 | 0.11 |
| **70** | 0.36 | 0.15 | 0.16 | 0.15 |
| **80** | 0.50 | 0.21 | 0.22 | 0.21 |
| **90** | 0.78 | 0.31 | 0.35 | 0.31 |
| **100** | 0.98 | 0.43 | 0.40 | 0.43 |
| **110** | 1.3 | 0.57 | 0.54 | 0.57 |
| **125** | 1.6 | 0.70 | 0.68 | 0.70 |
| **140** | 2.1 | 0.93 | 0.9 | 0.93 |
| **160** | 3.1 | 1.3 | 1.3 | 1.3 |
| **180** | 4.5 | 1.5 | 2.0 | 1.5 |
| **200** | 6.8 | 2.3 | 2.8 | 2.3 |

Couplings of the VSB series are intended for vertical installation. They are equipped with two separate lubricant chambers and optionally suitable for oil or grease lubrication.

In case of oil lubrication, it has to be observed that different oil quantities are required for the lower and upper speed range.

The dismounting dimension F is required for the vertical installation and removal of the machines and O-ring replacement.

For coupling selection, please see page 6.

The couplings can also be supplied with a spacer or intermediate shaft so as to accommodate larger shaft distances.

Torsional stiffness values are contained in the data table for SB type couplings.

1) Based on a permissible angular misalignment of $\Delta K_{w\ perm.} = 1.5°$ per coupling half.

Higher misalignments are possible, but require special measures.

2) Values for the complete coupling, with bore $d_1$; $d_{2\ max.}$

3) The maximum speed capacity is determined by the misalignment. Please see table 'Speed Factors'.

**Other sizes available on request.**

| Type VSB Size | Norm. cont. duty $\frac{P_{KN}}{n}$ kW·min | Speed 3) min rpm | Speed 3) max rpm | Dimensions bore $d_1;d_2$ pre mm | bore $d_1;d_2$ min mm | bore $d_1;d_2$ max mm | A mm | B mm | C mm | D mm | E mm | F mm | G mm | Max. static radial misalignment $\Delta K_{r\ max.}$ 1) mm | Grease quantity at min. and max. speed upper half kg | Grease quantity lower half kg | Mass 2) moment of inertia J kgm² | Weight 2) kg |
|---|---|---|---|---|---|---|---|---|---|---|---|---|---|---|---|---|---|---|
| **30** | 0.082 | 1300 | 7500 | 10 | 12 | 32 | 118 | 92 | 110 | 50 | 7 | 75 | 45 | ±1.95 | 0.070 | 0.016 | 0.007 | 4.6 |
| **40** | 0.146 | 1300 | 6900 | 20 | 22 | 46 | 145 | 115 | 131 | 60 | 8 | 90 | 60 | ±2.70 | 0.095 | 0.025 | 0.018 | 7.9 |
| **50** | 0.288 | 1300 | 6300 | 20 | 22 | 58 | 165 | 135 | 151 | 70 | 8 | 110 | 75 | ±3.00 | 0.17 | 0.07 | 0.035 | 11.8 |
| **60** | 0.50 | 900 | 5900 | 26 | 28 | 70 | 200 | 160 | 175 | 80 | 9 | 120 | 90 | ±3.45 | 0.29 | 0.11 | 0.084 | 19.1 |
| **70** | 0.82 | 900 | 5400 | 26 | 28 | 78 | 220 | 178 | 197 | 90 | 11 | 130 | 100 | ±3.90 | 0.36 | 0.15 | 0.14 | 27 |
| **80** | 1.14 | 900 | 5000 | 30 | 32 | 92 | 240 | 196 | 217 | 100 | 11 | 150 | 120 | ±4.35 | 0.50 | 0.21 | 0.21 | 34 |
| **90** | 1.64 | 650 | 4700 | 30 | 32 | 100 | 270 | 225 | 241 | 110 | 13 | 170 | 130 | ±4.80 | 0.78 | 0.31 | 0.40 | 49 |
| **100** | 2.30 | 650 | 4300 | 53 | 55 | 110 | 280 | 240 | 261 | 120 | 13 | 180 | 140 | ±5.25 | 0.98 | 0.43 | 0.57 | 56 |
| **110** | 2.88 | 650 | 4000 | 63 | 65 | 120 | 310 | 265 | 282 | 130 | 14 | 190 | 155 | ±5.70 | 1.3 | 0.57 | 0.85 | 75 |
| **125** | 4.60 | 650 | 3700 | 73 | 75 | 138 | 340 | 295 | 325 | 150 | 15 | 215 | 175 | ±6.45 | 1.6 | 0.70 | 1.40 | 104 |
| **140** | 6.48 | 500 | 3400 | 83 | 85 | 156 | 390 | 325 | 355 | 165 | 15 | 230 | 200 | ±7.20 | 2.1 | 0.93 | 2.50 | 147 |
| **160** | 9.24 | 500 | 3100 | 118 | 120 | 180 | 435 | 370 | 410 | 190 | 18 | 270 | 230 | ±8.40 | 3.1 | 1.3 | 4.41 | 204 |
| **180** | 12.92 | 500 | 2900 | 138 | 140 | 200 | 480 | 415 | 462 | 220 | 18 | 300 | 260 | ±9.60 | 4.5 | 1.5 | 7.62 | 292 |
| **200** | 18.4 | 500 | 2700 | 158 | 160 | 225 | 545 | 465 | 519 | 245 | 21 | 340 | 290 | ±10.80 | 6.8 | 2.3 | 14.3 | 430 |

Subject to change due to technical improvement.

# Curved Tooth Couplings

## Construction Series VLBk

Dimension Table No. 243 144

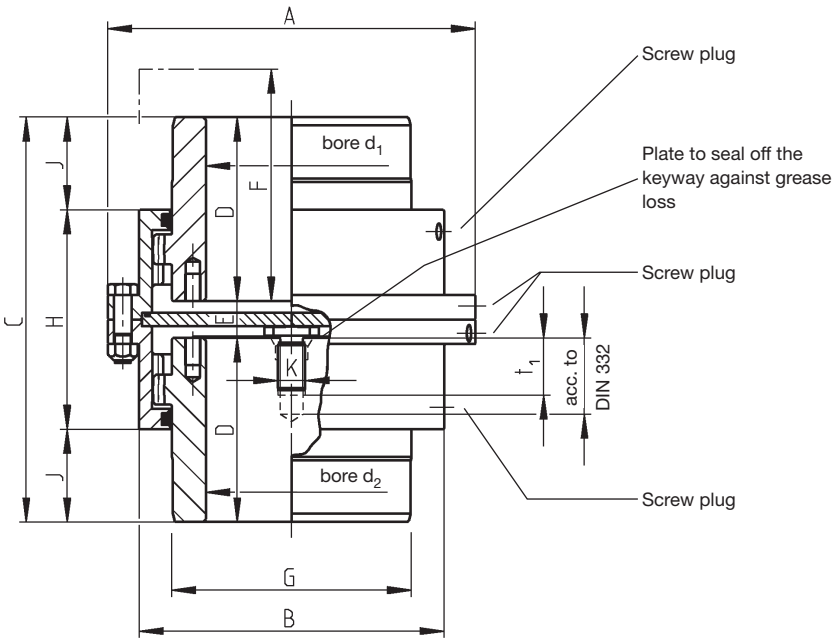


| Centering bores with thread acc. to DIN 332 | | |
|---|---|---|
| Diameter range of shaft ends in mm | K mm | $t_1$ mm |
| over 24 to 30 | M10 | 22 |
| over 30 to 38 | M12 | 28 |
| over 38 to 50 | M16 | 36 |
| over 50 to 85 | M20 | 42 |
| over 85 to 130 | M24 | 50 |
| over 130 to 160 | M30 | 60 |
| over 160 to 200 | M36 | 80 |
| over 200 to 250 | M48 | 100 |
| over 250 to 300 | M56 | 125 |

Couplings of the VLBk series are intended for vertical installation. They are equipped with two separate lubricant chambers and optionally suitable for oil or grease lubrication.

The couplings can also be supplied with a spacer or intermediate shaft so as to accommodate larger shaft distances.

Torsional stiffness values are contained in the data table for LBk-type couplings.

For coupling selection, please see page 6.

The dismounting dimension F is required for the vertical installation and removal of the machines and O-ring replacement.

1) Based on a permissible angular misalignment of $\Delta K_{w\ perm.} = 0{,}75°$ per coupling half.
Higher misalignment capacity is possible, but requires special measures.

2) Values for the complete coupling, with bore $d_1$; $d_{2\ max.}$

3) The maximum speed capacity is determined by the misalignment. Please see table 'Speed Factors'.

**Other sizes available on request.**

| Type VLBk Size | Norm. cont. duty $P_{KN}/n$ kW·min | Speed 3) $n_{max.}$ rpm | Dimensions bore $d_1;d_2$ min mm | max mm | A mm | B mm | C mm | D mm | E mm | F mm | G mm | H mm | J mm | Max. static radial misalignment $\Delta K_{max.}$ 1) mm | Grease quantity per coupling half kg | Mass 2) moment of inertia J kgm² | Weight 2) kg |
|---|---|---|---|---|---|---|---|---|---|---|---|---|---|---|---|---|---|
| **32** | 0.050 | 8500 | 12 | 35 | 105 | 74 | 106 | 45 | 16 | 75 | 48 | 90 | 8.0 | ±0.57 | 0.028 | 0.004 | 3.0 |
| **38** | 0.082 | 7500 | 12 | 42 | 115 | 87 | 127 | 55 | 17 | 85 | 60 | 101 | 13.0 | ±0.69 | 0.052 | 0.006 | 4.5 |
| **48** | 0.146 | 6900 | 22 | 55 | 145 | 108 | 147 | 65 | 17 | 95 | 77 | 102 | 22.5 | ±0.71 | 0.069 | 0.016 | 7.6 |
| **60** | 0.288 | 6300 | 22 | 65 | 165 | 125 | 168 | 75 | 18 | 105 | 90 | 107 | 30.5 | ±0.77 | 0.11 | 0.025 | 10.0 |
| **70** | 0.50 | 5900 | 28 | 80 | 195 | 146 | 191 | 85 | 21 | 115 | 112 | 112 | 39.5 | ±0.78 | 0.14 | 0.062 | 16.0 |
| **80** | 0.82 | 5400 | 28 | 92 | 215 | 168 | 212 | 95 | 22 | 125 | 128 | 119 | 46.5 | ±0.84 | 0.21 | 0.103 | 21.5 |
| **90** | 1.14 | 5000 | 32 | 105 | 230 | 185 | 234 | 105 | 24 | 135 | 145 | 127 | 53.5 | ±0.92 | 0.27 | 0.150 | 26.5 |
| **100** | 1.64 | 4700 | 32 | 115 | 265 | 210 | 266 | 120 | 26 | 155 | 160 | 148 | 59.0 | ±1.08 | 0.40 | 0.303 | 41.0 |
| **110** | 2.30 | 4300 | 55 | 126 | 270 | 224 | 297 | 135 | 27 | 170 | 176 | 161 | 68.0 | ±1.23 | 0.52 | 0.390 | 48.5 |
| **125** | 2.88 | 4000 | 65 | 145 | 305 | 245 | 317 | 145 | 27 | 180 | 200 | 175 | 71.0 | ±1.34 | 0.58 | 0.675 | 65.0 |
| **140** | 4.60 | 3700 | 75 | 162 | 330 | 270 | 359 | 165 | 29 | 200 | 224 | 197 | 81.0 | ±1.44 | 0.69 | 1.10 | 87.5 |
| **160** | 6.48 | 3400 | 85 | 185 | 375 | 305 | 400 | 185 | 30 | 225 | 256 | 221 | 89.5 | ±1.70 | 0.94 | 1.97 | 126 |
| **180** | 9.24 | 3100 | 120 | 210 | 425 | 348 | 462 | 215 | 32 | 255 | 288 | 250 | 106 | ±1.89 | 1.5 | 3.74 | 185 |
| **200** | 12.92 | 2900 | 140 | 230 | 470 | 392 | 524 | 245 | 34 | 290 | 320 | 272 | 126 | ±2.12 | 2.3 | 6.39 | 255 |
| **225** | 18.4 | 2700 | 160 | 260 | 535 | 437 | 587 | 275 | 37 | 330 | 362 | 315 | 136 | ±2.42 | 3.1 | 11.62 | 363 |

Subject to change due to technical improvement.


RENK Aktiengesellschaft, Rheine Works · Phone: +49 5971 790 0 · Fax: +49 5971 790 208 and 790 256

# Curved Tooth Couplings

## Construction Series HBk

Dimension Table No. 243 145

**Fig. 1: Sizes 140 - 450**

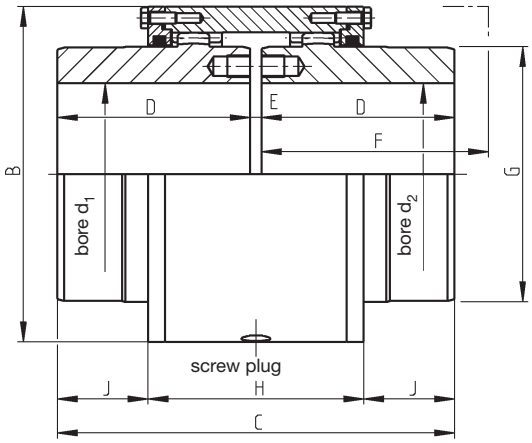


**Fig. 2: Sizes 30 - 125** (TRAVEX®)

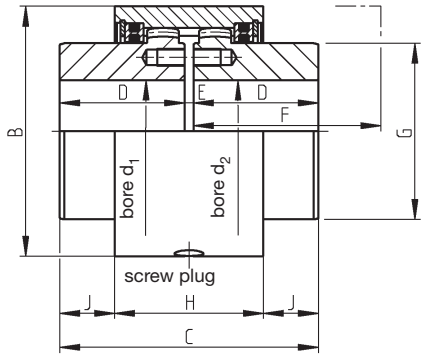


For coupling selection, please see page 6.

The dismounting dimension F is required for the vertical installation and removal of the machines and O-ring replacement.

**Sizes 30 to 160 available from stock. Other sizes available on request.**

Torsional stiffness values are contained in the data table for HBk-type couplings.

1) Based on a permissible angular misalignment of $\Delta K_{w\ perm.} = 0.75°$ per coupling half.

Higher misalignment capacity is possible, but requires special measures.

2) Values for the complete coupling, with bore $d_1$; $d_{2\ max.}$

3) The maximum speed capacity is determined by the misalignment. Please see table 'Speed Factors'.

| Type HBk Size | Norm. cont. duty $P_{KN}/n$ kW·min | Speed 3) $n_{max.}$ rpm | Dimensions bore $d_1;d_2$ min mm | max mm | B mm | C mm | D mm | E mm | F mm | G mm | H mm | J mm | Max. static radial misalignment $\Delta K_{max.}$ 1) mm | Total grease quantity kg | Mass 2) moment of inertia J kgm² | Weight 2) kg |
|---|---|---|---|---|---|---|---|---|---|---|---|---|---|---|---|---|
| **30** | 0.047 | 9000 | 12 | 32 | 74 | 85 | 40 | 5 | 85 | 45 | 73 | 6 | ±0.67 | 0.02 | 0.0015 | 1.8 |
| **40** | 0.115 | 7500 | 18 | 42 | 95 | 105 | 50 | 5 | 95 | 60 | 81 | 12 | ±0.70 | 0.04 | 0.0043 | 3.3 |
| **50** | 0.183 | 6900 | 20 | 55 | 115 | 125 | 60 | 5 | 110 | 78 | 89 | 18 | ±0.78 | 0.06 | 0.0108 | 5.7 |
| **60** | 0.387 | 6300 | 24 | 65 | 138 | 145 | 70 | 5 | 120 | 95 | 102 | 21.5 | ±0.85 | 0.07 | 0.0288 | 10.3 |
| **75** | 0.691 | 5600 | 28 | 78 | 158 | 166 | 80 | 6 | 130 | 110 | 109 | 28.5 | ±0.99 | 0.10 | 0.0528 | 14.3 |
| **90** | 1.16 | 5000 | 32 | 95 | 188 | 207 | 100 | 7 | 150 | 135 | 117 | 45 | ±1.08 | 0.17 | 0.114 | 22.6 |
| **105** | 1.82 | 4500 | 35 | 110 | 220 | 228 | 110 | 8 | 165 | 155 | 131 | 48.5 | ±1.20 | 0.28 | 0.237 | 35.5 |
| **125** | 2.73 | 4000 | 38 | 128 | 250 | 248 | 120 | 8 | 175 | 180 | 149 | 49.5 | ±1.36 | 0.35 | 0.45 | 50 |
| **140** | 4.60 | 3700 | 75 | 162 | 295 | 350 | 170 | 10 | 200 | 224.5 | 190 | 80 | ±1.44 | 0.82 | 1.15 | 89 |
| **160** | 6.48 | 3400 | 85 | 185 | 325 | 392 | 190 | 12 | 230 | 256.5 | 214 | 89 | ±1.70 | 1.2 | 1.9 | 120 |
| **180** | 9.24 | 3100 | 120 | 210 | 370 | 452 | 220 | 12 | 260 | 288.5 | 240 | 106 | ±1.89 | 1.7 | 3.0 | 174 |
| **200** | 12.92 | 2900 | 140 | 230 | 415 | 514 | 250 | 14 | 300 | 320.5 | 272 | 121 | ±2.12 | 2.2 | 6.2 | 251 |
| **225** | 18.4 | 2700 | 160 | 260 | 465 | 576 | 280 | 16 | 330 | 362 | 308 | 134 | ±2.42 | 3.5 | 11.6 | 350 |
| **250** | 25.6 | 2400 | 160 | 280 | 510 | 620 | 300 | 20 | 350 | 400 | 292 | 164 | ±2.46 | 3.8 | 14.8 | 435 |
| **265** | 32.8 | 2200 | 180 | 310 | 560 | 680 | 330 | 20 | 380 | 440 | 332 | 174 | ±2.83 | 4.5 | 24.5 | 600 |
| **280** | 41.0 | 2100 | 200 | 325 | 595 | 680 | 330 | 20 | 380 | 460 | 292 | 194 | ±2.23 | 5 | 28.4 | 636 |
| **315** | 51.4 | 2000 | 220 | 360 | 660 | 740 | 360 | 20 | 420 | 510 | 330 | 205 | ±2.54 | 5.5 | 47.5 | 840 |
| **335** | 64.8 | 1900 | 240 | 380 | 675 | 780 | 380 | 20 | 440 | 535 | 342 | 219 | ±2.61 | 6 | 56.2 | 960 |
| **355** | 82.0 | 1800 | 260 | 410 | 725 | 825 | 400 | 25 | 460 | 580 | 368 | 228.5 | ±2.83 | 7 | 78.5 | 1150 |
| **375** | 98.6 | 1700 | 280 | 440 | 795 | 865 | 420 | 25 | 480 | 620 | 416 | 224.5 | ±3.26 | 11 | 118.6 | 1465 |
| **400** | 118.3 | 950 | 330 | 470 | 840 | 905 | 440 | 25 | 500 | 665 | 464 | 220.5 | ±3.77 | 16 | 158 | 1720 |
| **425** | 138.0 | 900 | 355 | 500 | 890 | 945 | 460 | 25 | 520 | 710 | 493 | 226 | ±4.03 | 19 | 221 | 2120 |
| **450** | 165.1 | 875 | 370 | 520 | 925 | 990 | 480 | 30 | 550 | 730 | 506 | 242 | ±4.14 | 20 | 261 | 2290 |

Subject to change due to technical improvement.

# Curved Tooth Couplings

## Allocation to Standard Motors

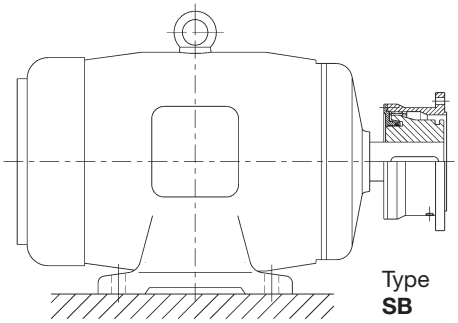

Type **SB**

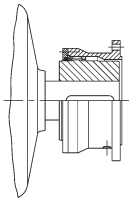

Type **SBk**

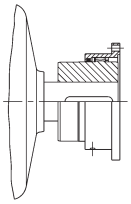

Type **LBk**

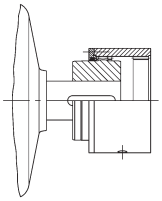

Type **HBk**

| Three-phase induction motors acc. to IEC | | | | | | Allocation of coupling size | | | |
|---|---|---|---|---|---|---|---|---|---|
| | Power kW at rpm | | | | Cyl. shaft end Ø x length | Coupling series | | | |
| Size | 3000 | 1500 | 1000 | 750 | mm | SB | SBk | LBk | HBk |
| **90 S** | 1.5 | 1.1 | 0.75 | 0.37 | 24 x 50 | 30 | – | 32 | 30 |
| **90 L** | 2.2 | 1.5 | 1.1 | 0.55 | 24 x 50 | 30 | – | 32 | 30 |
| **100 L** | 3 | 2.2 | 1.5 | 0.75 | 28 x 60 | 30 | – | 32 | 30 |
| " | – | 3 | – | 1.1 | 28 x 60 | 30 | – | 32 | 30 |
| **112 M** | 4 | 4 | 2.2 | 1.5 | 28 x 60 | 30 | – | 32 | 30 |
| **132 S** | 5.5 | 5.5 | 3 | 2.2 | 38 x 80 | 40 | 38 | 38 | 40 |
| " | 7.5 | – | – | – | 38 x 80 | 40 | 38 | 38 | 40 |
| **132 M** | – | 7.5 | 4 | 3 | 38 x 80 | 40 | 38 | 38 | 40 |
| " | – | – | 5.5 | – | 38 x 80 | 40 | 38 | 38 | 40 |
| **160 M** | 11 | 11 | 7.5 | 4 | 42 x 110 | 40 | 38 | 38 | 40 |
| " | 15 | – | – | 5.5 | 42 x 110 | 40 | 38 | 38 | 40 |
| **160 L** | 18.5 | 15 | 11 | 7.5 | 42 x 110 | 40 | 38 | 38 | 40 |
| **180 M** | 22 | 18.5 | – | – | 48 x 110 | 50 | 48 | 48 | 50 |
| **180 L** | – | 22 | 15 | 11 | 48 x 110 | 50 | 48 | 48 | 50 |
| **200 L** | 30 | – | 18.5 | – | 55 x 110 | 50 | 48 | 48 | 50 |
| " | 37 | 30 | 22 | 15 | 55 x 110 | 50 | 48 | 48 | 50 |
| **225 S** | – | 37 | – | 18.5 | 60 x 140 | 60 | 60 | 60 | 60 |
| **225 M** | 45 | – | – | – | 55 x 110 | 50 | 48 | 48 | 50 |
| " | – | 45 | 30 | 22 | 60 x 140 | 60 | 60 | 60 | 60 |
| **250 M** | 55 | – | – | – | 60 x 140 | 60 | 60 | 60 | 60 |
| " | – | 55 | 37 | 30 | 65 x 140 | 60 | 60 | 60 | 60 |
| **280 S** | 75 | – | – | – | 65 x 140 | 60 | 60 | 60 | 60 |
| " | – | 75 | 45 | 37 | 75 x 140 | 70 | 70 | 70 | 75 |
| **280 M** | 90 | – | – | – | 65 x 140 | 60 | 60 | 60 | 60 |
| " | – | 90 | 55 | 45 | 75 x 140 | 70 | 70 | 70 | 75 |
| **315 S** | 110 | – | – | – | 65 x 140 | 60 | 60 | 60 | 60 |
| " | – | 110 | 75 | 55 | 80 x 170 | 80 | 70 | 70 | 90 |
| **315 M** | 132 | – | – | – | 65 x 140 | 60 | 60 | 60 | 60 |
| " | – | 132 | 90 | 75 | 80 x 170 | 80 | 70 | 70 | 90 |
| **315 L** | 160 | – | – | – | 65 x 140 | 60 | 60 | 60 | 60 |
| " | 200 | – | – | – | 65 x 140 | 60 | 60 | 60 | 60 |
| **315 L** | – | 160 | 110 | 90 | 80 x 170 | 80 | 70 | 70 | 90 |
| " | – | 200 | 132 | 110 | 80 x 170 | 80 | 70 | 70 | 90 |
| **355 L** | 250 | – | – | – | 75 x 140 | 70 | 70 | 70 | 75 |
| " | 315 | – | – | – | 75 x 140 | 70 | 70 | 70 | 75 |
| **355 L** | – | 250 | 160 | 132 | 95 x 170 | 90 | 90 | 90 | 90 |
| " | – | 315 | 200 | 160 | 95 x 170 | 90 | 90 | 90 | 90 |
| " | – | – | 250 | 200 | 95 x 170 | 90 | 90 | 90 | 90 |
| **400 L** | 355 | – | – | – | 80 x 170 | 80 | 70 | 70 | 90 |
| " | 400 | – | – | – | 80 x 170 | 80 | 70 | 70 | 90 |
| " | – | 355 | – | – | 100 x 210 | 90 | 90 | 90 | 105 |
| " | – | 400 | 315 | 250 | 100 x 210 | 90 | 90 | 90 | 105 |
| **450** | 500 | – | – | – | 80 x 170 | 80 | 70 | 70 | 90 |
| " | 630 | – | – | – | 80 x 170 | 80 | 70 | 70 | 90 |
| " | – | 500 | 400 | 315 | 110 x 210 | 100 | 100 | 100 | 105 |
| " | – | 630 | 500 | 400 | 110 x 210 | 100 | 100 | 100 | 105 |

Subject to change due to technical improvement.


RENK Aktiengesellschaft, Rheine Works · Phone: +49 5971 790 0 · Fax: +49 5971 790 208 and 790 256

# Distance Plates

## for Curved Tooth Couplings

## Series SB

Dimension Table No. 243 146

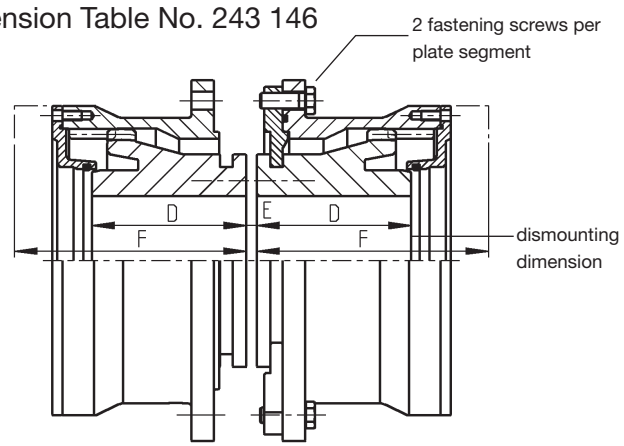


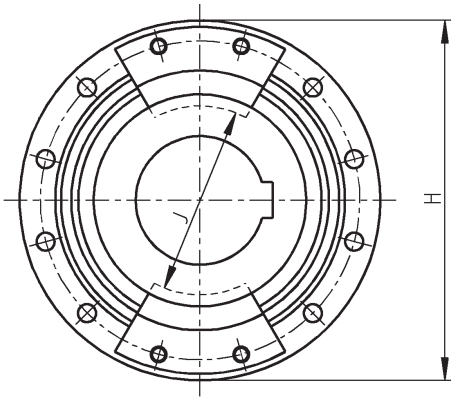


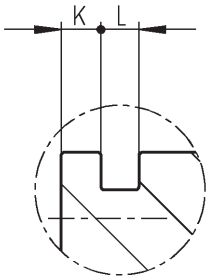


Distance plates are used to radially and axially guide the coupling housing, when the coupling is open. This allows to speed up the driving machine without the driven machine being coupled.

This is, for example, necessary when testing electric motors. Distance plates are only intended for short-time use and are not suitable for continuous operation.

The space - dimension F - is required to install and remove the distance plates.

**Other sizes available on request.**

| Type SB | Dimensions | | | | | | | | Dimensions of puller threads in the hubs | | |
|---|---|---|---|---|---|---|---|---|---|---|---|
| Size | D mm | E mm | F mm | H mm | J mm | K mm | L mm | Size of fastening screws mm | Thread diameter | Hole distance mm | Number of holes |
| **30** | 50 | 5 | 75 | 115 | 48 | 4.5 | 5 | M 6 x 20 | – | – | – |
| **40** | 60 | 5 | 90 | 145 | 62 | 4.5 | 5 | M 8 x 20 | – | – | – |
| **50** | 70 | 5 | 110 | 165 | 75 | 4.5 | 6 | M 8 x 25 | – | – | – |
| **60** | 80 | 6 | 120 | 195 | 85 | 7.0 | 6 | M 10 x 25 | – | – | – |
| **70** | 90 | 6 | 130 | 215 | 105 | 8.0 | 8 | M 10 x 30 | M 8 | 94 | 2 |
| **80** | 100 | 6 | 150 | 230 | 118 | 8.5 | 8 | M 10 x 30 | M 8 | 107 | 2 |
| **90** | 110 | 8 | 170 | 265 | 128 | 8.5 | 10 | M 12 x 35 | M 10 | 115 | 2 |
| **100** | 120 | 8 | 180 | 270 | 145 | 10.5 | 10 | M 12 x 35 | M 12 | 130 | 2 |
| **110** | 130 | 8 | 190 | 305 | 156 | 11.0 | 12 | M 16 x 40 | M 12 | 140 | 2 |
| **125** | 150 | 10 | 215 | 330 | 180 | 11.0 | 12 | M 16 x 45 | M 12 | 162 | 2 |
| **140** | 165 | 10 | 230 | 375 | 210 | 12.0 | 13 | M 18 x 45 | M 16 | 190 | 2 |
| **160** | 190 | 12 | 270 | 425 | 240 | 14.0 | 14 | M 22 x 55 | M 20 | 215 | 2 |
| **180** | 220 | 12 | 300 | 470 | 270 | 14.5 | 14 | M 22 x 55 | M 24 | 240 | 2 |
| **200** | 245 | 14 | 340 | 535 | 310 | 15.0 | 15 | M 27 x 60 | M 24 | 270 | 2 |
| **220** | 270 | 16 | 360 | 580 | 325 | 21.5 | 18 | M 27 x 60 | M 24 | 290 | 2 |
| **240** | 290 | 18 | 380 | 645 | 350 | 22.0 | 19 | M 33 x 60 | M 24 | 320 | 2 |
| **260** | 310 | 20 | 400 | 680 | 375 | 23.0 | 20 | M 33 x 60 | M 30 | 340 | 2 |
| **280** | 340 | 22 | 440 | 745 | 420 | 24.0 | 21 | M 36 x 70 | M 30 | 380 | 2 |
| **300** | 360 | 24 | 470 | 775 | 435 | 26.5 | 24 | M 36 x 75 | M 36 | 395 | 2 |
| **320** | 380 | 26 | 500 | 825 | 470 | 28.0 | 25 | M 36 x 75 | M 36 | 430 | 2 |

Subject to change due to technical improvement.

# Distance Plates

## for Curved Tooth Couplings

## Series SBk

Dimension table No. 243 147/1

SBk-couplings with standard hub

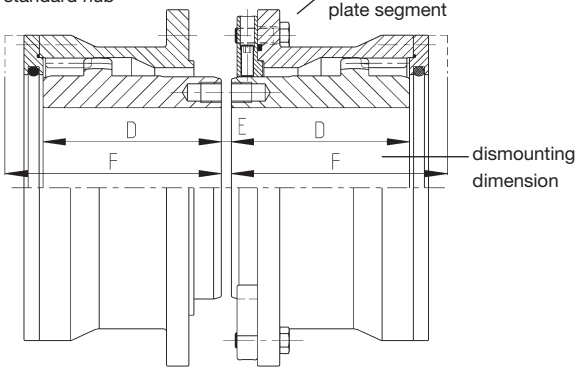


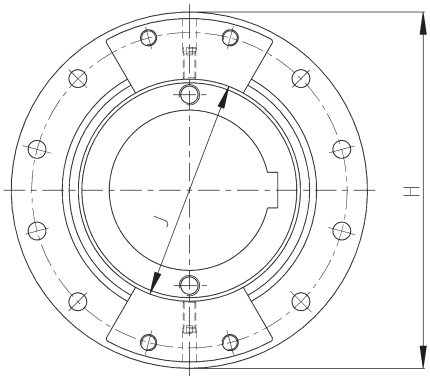


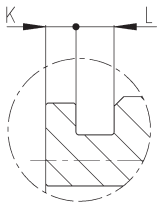


SBRk couplings with hub and retaining ring

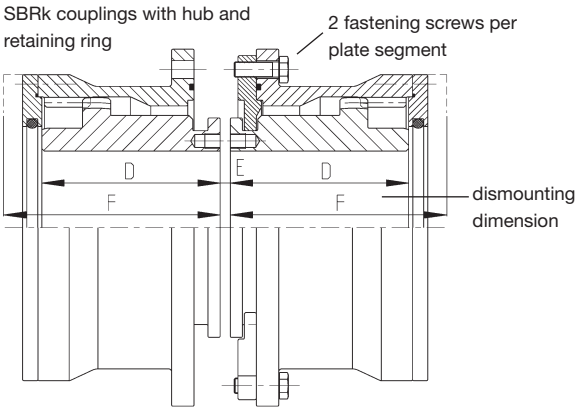


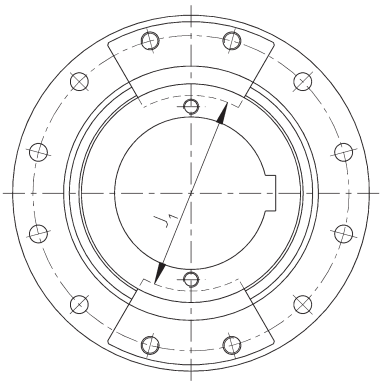


1) Dimension J applies to SBk couplings with normal hub.

2) Dimension $J_1$ applies to SBRk-couplings with hub and retaining ring

**Other sizes available on request.**

| Type SBk | Dimensions | | | | | | | | | Dimensions of puller threads in the hubs | | |
|---|---|---|---|---|---|---|---|---|---|---|---|---|
| Size | D mm | E mm | F mm | H mm | J[1] mm | $J_1$[2] mm | K mm | L mm | Size of fastening screws mm | Thread diameter | Hole distance mm | Number of holes |
| **38** | 60 | 5 | 90 | 115 | 60 | 54 | 4.5 | 5 | M 6 x 20 | – | – | – |
| **48** | 70 | 5 | 100 | 145 | 76.2 | 69 | 4.5 | 5 | M 8 x 20 | – | – | – |
| **60** | 80 | 6 | 110 | 165 | 89.2 | 81 | 4.5 | 6 | M 8 x 25 | – | – | – |
| **70** | 90 | 6 | 120 | 195 | 111.5 | 98 | 7 | 6 | M 10 x 25 | M 8 | 95 | 2 |
| **80** | 100 | 6 | 130 | 215 | 127 | 113 | 8 | 8 | M 10 x 30 | M 12 | 110 | 2 |
| **90** | 110 | 8 | 140 | 230 | 144 | 128 | 8.5 | 8 | M 12 x 35 | M 12 | 125 | 2 |
| **100** | 125 | 8 | 150 | 265 | 158.5 | 138 | 8.5 | 10 | M 12 x 35 | M 12 | 140 | 2 |
| **110** | 140 | 8 | 170 | 270 | 174.6 | 152 | 10.5 | 10 | M 12 x 35 | M 16 | 150 | 2 |
| **125** | 150 | 10 | 180 | 305 | 199.6 | 171 | 11 | 12 | M 16 x 40 | M 16 | 170 | 2 |
| **140** | 170 | 10 | 200 | 330 | 222.9 | 195 | 11 | 12 | M 16 x 45 | M 20 | 190 | 2 |
| **160** | 190 | 12 | 230 | 375 | 254.9 | 225 | 12 | 13 | M 18 x 45 | M 20 | 220 | 2 |
| **180** | 220 | 12 | 260 | 425 | 286.9 | 255 | 14 | 14 | M 22 x 55 | M 24 | 245 | 2 |
| **200** | 250 | 14 | 300 | 470 | 318.8 | 290 | 14.5 | 14 | M 22 x 55 | M 24 | 270 | 2 |
| **225** | 280 | 16 | 330 | 530 | 359.8 | 332 | 15 | 15 | M 27 x 60 | M 24 | 305 | 2 |

Subject to change due to technical improvement.


RENK Aktiengesellschaft, Rheine Works · Phone: +49 5971 790 0 · Fax: +49 5971 790 208 and 790 256

# Distance Plates

## for Curved Tooth Couplings

## Series LBk

Dimension table No. 243 147/2

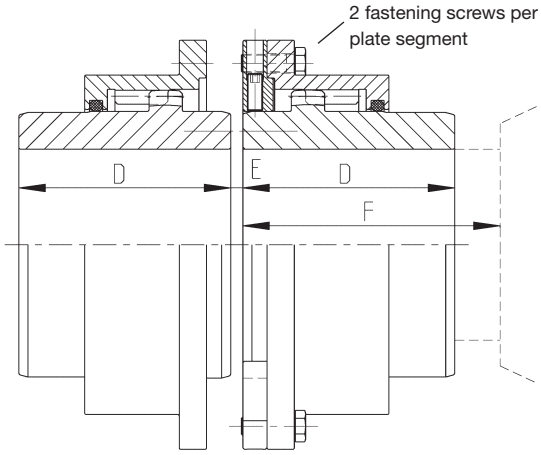


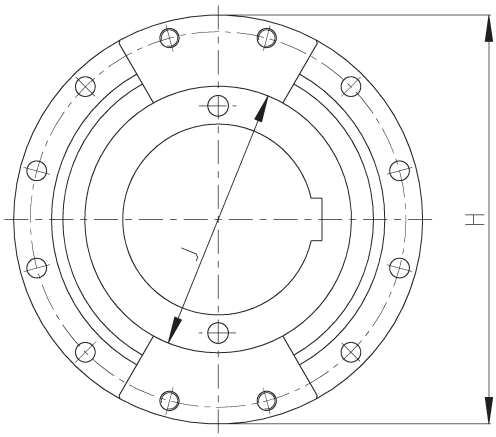


**Other sizes available on request.**

| Type LBk | Dimensions | | | | | | Dimensions of puller threads in the hubs | | |
|---|---|---|---|---|---|---|---|---|---|
| Size | D mm | E mm | F mm | H mm | J mm | Size of fastening screws mm | Thread diameter | Hole distance mm | Number of holes |
| **32** | 50 | 4 | 80 | 105 | 48 | M 6 x 20 | – | – | – |
| **38** | 60 | 5 | 90 | 115 | 60 | M 6 x 20 | – | – | – |
| **48** | 70 | 5 | 100 | 145 | 77 | M 8 x 20 | – | – | – |
| **60** | 80 | 6 | 110 | 165 | 90 | M 8 x 25 | – | – | – |
| **70** | 90 | 6 | 120 | 195 | 112.5 | M 10 x 25 | M 8 | 95 | 2 |
| **80** | 100 | 6 | 130 | 215 | 128 | M 10 x 30 | M 12 | 110 | 2 |
| **90** | 110 | 8 | 140 | 230 | 145 | M 10 x 30 | M 12 | 125 | 2 |
| **100** | 125 | 8 | 150 | 265 | 160.5 | M 12 x 35 | M 12 | 140 | 2 |
| **110** | 140 | 8 | 170 | 270 | 176 | M 12 x 35 | M 16 | 150 | 2 |
| **125** | 150 | 10 | 180 | 305 | 200.5 | M 16 x 40 | M 16 | 170 | 2 |
| **140** | 170 | 10 | 200 | 330 | 224.5 | M 16 x 45 | M 20 | 190 | 2 |
| **160** | 190 | 12 | 230 | 375 | 256.5 | M 18 x 45 | M 20 | 220 | 2 |
| **180** | 220 | 12 | 260 | 425 | 288.5 | M 22 x 55 | M 24 | 245 | 2 |
| **200** | 250 | 14 | 300 | 470 | 320.5 | M 22 x 55 | M 24 | 270 | 2 |
| **225** | 280 | 16 | 330 | 530 | 362 | M 27 x 60 | M 24 | 305 | 2 |

Subject to change due to technical improvement.

# Lubricant Quantities for Spacers

Depending on the design and size, an additional lubricant quantity has to be taken into account for curved tooth couplings with spacer. The length of the spacer is the decisive criterion to define the correct quantity. The tables contain the quantity needed for the spacer with a minimum length of $L = L_{min}$, and the portions required per 10 mm tube length for models with $L > L_{min}$.

The quantities listed in the tables have to be added to the quantity needed for the coupling. The lubricant quantity for each coupling type and size is stated in the dimension tables of the different coupling series.

The ends of longer spacers are closed with end caps. In such cases, an additional lubricant filling is not required for the spacer. Length dimensions of $L > 400$ serve as a guiding value for this.

1) Coupling sizes for which no details are listed in the tables do not require an additional lubricant quantity for the spacer.

| Coupling Type **SBL** Size | Min. Spacer Length $L_{min}$ mm | Oil Quantity for Oil Lubrication: Spacer with $L = L_{min}$ litres | Oil Quantity for Oil Lubrication: per 10 mm tube length with $L > L_{min}$ litres | Grease Quantity for Grease Lubrication: Spacer with $L = L_{min}$ kg | Grease Quantity for Grease Lubrication: per 10 mm tube length with $L > L_{min}$ kg |
|---|---|---|---|---|---|
| **30** | 75 | 0.012 | 0.0016 | 0.015 | 0.002 |
| **40** | 80 | 0.012 | 0.0015 | 0.015 | 0.0019 |
| **50** | 80 | 0.022 | 0.0027 | 0.030 | 0.0037 |
| **60** | 100 | 0.033 | 0.0033 | 0.053 | 0.0053 |
| **70** | 100 | 0.038 | 0.0038 | 0.058 | 0.0058 |
| **80** | 100 | 0.065 | 0.0065 | 0.095 | 0.0095 |
| **90** | 120 | 0.09 | 0.0075 | 0.144 | 0.012 |
| **100** | 120 | 0.12 | 0.0097 | 0.168 | 0.014 |
| **110** | 155 | 0.28 | 0.018 | 0.45 | 0.029 |
| **125** | 155 | 0.35 | 0.022 | 0.50 | 0.032 |
| **140** | 175 | 0.39 | 0.026 | 0.63 | 0.036 |
| **160** | 205 | 0.45 | 0.022 | 0.66 | 0.032 |
| **180** | 205 | 1.0 | 0.049 | 1.41 | 0.069 |
| **200** | 240 | 0.6 | 0.025 | 0.84 | 0.035 |

| Coupling Type **SBLk** Size | Min. Spacer Length $L_{min}$ mm | Grease Quantity: Spacer with $L = L_{min}$ kg | Grease Quantity: per 10 mm tube length with $L > L_{min}$ kg |
|---|---|---|---|
| **38** | 75 | 0.015 | 0.002 |
| **48** | 80 | 0.015 | 0.0019 |
| **60** | 80 | 0.030 | 0.0037 |
| **70** | 100 | 0.053 | 0.0053 |
| **80** | 100 | 0.058 | 0.0058 |
| **90** | 100 | 0.095 | 0.0095 |
| **100** | 120 | 0.144 | 0.012 |
| **110** | 120 | 0.168 | 0.014 |
| **125** | 155 | 0.45 | 0.029 |
| **140** | 155 | 0.50 | 0.032 |
| **160** | 175 | 0.63 | 0.036 |
| **180** | 205 | 0.66 | 0.032 |
| **200** | 205 | 1.41 | 0.069 |
| **225** | 240 | 0.84 | 0.035 |

| Coupling Type **SRL** Size | Min. Spacer Length $L_{min}$ mm | Oil Quantity for Oil Lubrication: Spacer with $L = L_{min}$ litres | Oil Quantity for Oil Lubrication: per 10 mm tube length with $L > L_{min}$ litres | Grease Quantity for Grease Lubrication: Spacer with $L = L_{min}$ kg | Grease Quantity for Grease Lubrication: per 10 mm tube length with $L > L_{min}$ kg |
|---|---|---|---|---|---|
| **30** | 75 | 0.041 | 0.0054 | 0.044 | 0.0058 |
| **40** | 80 | 0.042 | 0.0052 | 0.045 | 0.0056 |
| **50** | 80 | 0.10 | 0.013 | 0.11 | 0.014 |
| **60** | 100 | 0.23 | 0.023 | 0.25 | 0.025 |
| **70** | 100 | 0.14 | 0.014 | 0.15 | 0.015 |
| **80** | 100 | 0.42 | 0.042 | 0.45 | 0.045 |
| **90** | 120 | 0.62 | 0.052 | 0.67 | 0.056 |
| **100** | 120 | 0.65 | 0.054 | 0.70 | 0.058 |
| **110** | 155 | 1.53 | 0.099 | 1.7 | 0.11 |
| **125** | 155 | 1.86 | 0.12 | 2.0 | 0.13 |
| **140** | 175 | 2.3 | 0.13 | 2.5 | 0.14 |
| **160** | 205 | 2.3 | 0.11 | 2.5 | 0.12 |
| **180** | 205 | 5.3 | 0.26 | 5.7 | 0.28 |
| **200** | 240 | 2.4 | 0.1 | 2.6 | 0.11 |

| Coupling Type **LBLk** Size | Min. Spacer Length $L_{min}$ mm | Grease Quantity[1]: Spacer with $L = L_{min}$ kg | Grease Quantity[1]: per 10 mm tube length with $L > L_{min}$ kg |
|---|---|---|---|
| **32** | 70 | 0.07 | 0.010 |
| **38** | 70 | 0.11 | 0.015 |
| **48** | 75 | 0.15 | 0.020 |
| **60** | 75 | 0.20 | 0.026 |
| **70** | 90 | 0.28 | 0.031 |
| **80** | 90 | 0.42 | 0.047 |
| **90** | 90 | 0.45 | 0.050 |
| **100** | 105 | 0.74 | 0.070 |
| **110** | 105 | 0.79 | 0.075 |
| **125** | 130 | 1.2 | 0.090 |
| **140** | 130 | 1.3 | 0.1 |
| **160** | 145 | – | – |
| **180** | 170 | – | – |
| **200** | 170 | – | – |
| **225** | 200 | – | – |

| Coupling Type **SRLk** Size | Min. Spacer Length $L_{min}$ mm | Grease Quantity[1]: Spacer with $L = L_{min}$ kg | Grease Quantity[1]: per 10 mm tube length with $L > L_{min}$ kg |
|---|---|---|---|
| **38** | 75 | 0.013 | 0.0017 |
| **48** | 80 | – | – |
| **60** | 80 | 0.084 | 0.010 |
| **70** | 100 | 0.130 | 0.012 |
| **80** | 100 | 0.064 | 0.006 |
| **90** | 100 | 0.23 | 0.022 |
| **100** | 120 | 0.40 | 0.031 |
| **110** | 120 | 0.47 | 0.037 |
| **125** | 155 | 0.96 | 0.059 |
| **140** | 155 | 1.17 | 0.071 |
| **160** | 175 | 1.44 | 0.078 |
| **180** | 205 | 1.03 | 0.048 |
| **200** | 205 | 3.6 | 0.17 |
| **225** | 240 | – | – |

Subject to change due to technical improvement.


RENK Aktiengesellschaft, Rheine Works · Phone: +49 5971 790 0 · Fax: +49 5971 790 208 and 790 256

# Torsional Stiffness Data for Curved Tooth Couplings

The torsional stiffness values $C_T$ listed in the tables for the different coupling series apply to the complete coupling in its basic design. The calculations are based on hub bores with the largest possible diameter ($d_1$; $d_{2\ max}$).

For couplings with spacer or intermediate shaft, these components need to be considered in addition.

The following pages 42 and 43 provide torsional stiffness data for spacers and intermediate shafts.
The total values are determined by using the stated formulae.

| Coupling size | Torsional Stiffness Values $C_T$ for the SB Coupling Series | | | |
|---|---|---|---|---|
| | Coupling Type | | | |
| | **SB** | **SBR** | **SBD/SBT** | **VSB** |
| | Nm/rad | Nm/rad | Nm/rad | Nm/rad |
| **30** | $0{,}44 \cdot 10^6$ | $0{,}44 \cdot 10^6$ | $0{,}44 \cdot 10^6$ | $0{,}44 \cdot 10^6$ |
| **40** | $1{,}44 \cdot 10^6$ | $1{,}14 \cdot 10^6$ | $1{,}15 \cdot 10^6$ | $1{,}14 \cdot 10^6$ |
| **50** | $2{,}15 \cdot 10^6$ | $2{,}15 \cdot 10^6$ | $2{,}15 \cdot 10^6$ | $2{,}15 \cdot 10^6$ |
| **60** | $3{,}97 \cdot 10^6$ | $3{,}97 \cdot 10^6$ | $4{,}00 \cdot 10^6$ | $3{,}97 \cdot 10^6$ |
| **70** | $5{,}45 \cdot 10^6$ | $5{,}45 \cdot 10^6$ | $5{,}49 \cdot 10^6$ | $5{,}45 \cdot 10^6$ |
| **80** | $9{,}00 \cdot 10^6$ | $9{,}00 \cdot 10^6$ | $9{,}10 \cdot 10^6$ | $9{,}00 \cdot 10^6$ |
| **90** | $12{,}42 \cdot 10^6$ | $12{,}42 \cdot 10^6$ | $12{,}49 \cdot 10^6$ | $12{,}42 \cdot 10^6$ |
| **100** | $14{,}26 \cdot 10^6$ | $14{,}26 \cdot 10^6$ | $14{,}30 \cdot 10^6$ | $14{,}26 \cdot 10^6$ |
| **110** | $18{,}77 \cdot 10^6$ | $18{,}77 \cdot 10^6$ | $18{,}90 \cdot 10^6$ | $18{,}77 \cdot 10^6$ |
| **125** | $26{,}10 \cdot 10^6$ | $26{,}10 \cdot 10^6$ | $26{,}21 \cdot 10^6$ | $26{,}10 \cdot 10^6$ |
| **140** | $40{,}36 \cdot 10^6$ | $40{,}36 \cdot 10^6$ | $38{,}8 \cdot 10^6$ | $40{,}36 \cdot 10^6$ |
| **160** | $64{,}39 \cdot 10^6$ | $64{,}39 \cdot 10^6$ | $64{,}7 \cdot 10^6$ | $64{,}39 \cdot 10^6$ |
| **180** | $79{,}11 \cdot 10^6$ | $79{,}11 \cdot 10^6$ | $79{,}4 \cdot 10^6$ | $79{,}11 \cdot 10^6$ |
| **200** | $108{,}12 \cdot 10^6$ | $108{,}12 \cdot 10^6$ | $108{,}7 \cdot 10^6$ | $108{,}12 \cdot 10^6$ |
| **220** | $169{,}8 \cdot 10^6$ | $172{,}46 \cdot 10^6$ | | |
| **240** | $214{,}7 \cdot 10^6$ | $219{,}02 \cdot 10^6$ | | |
| **260** | $265{,}7 \cdot 10^6$ | $280{,}94 \cdot 10^6$ | | |
| **280** | $349{,}7 \cdot 10^6$ | $354{,}35 \cdot 10^6$ | Values on request | |
| **300** | $399{,}9 \cdot 10^6$ | $416{,}72 \cdot 10^6$ | | |
| **320** | $527{,}3 \cdot 10^6$ | $553{,}10 \cdot 10^6$ | | |
| **340** | $729{,}6 \cdot 10^6$ | $719{,}82 \cdot 10^6$ | | |

| Coupling size | Torsional Stiffness Values $C_T$ for the HBk Coupling Series |
|---|---|
| | **HBk** |
| | Nm/rad |
| **30** | $0{,}70 \cdot 10^6$ |
| **40** | $1{,}71 \cdot 10^6$ |
| **50** | $3{,}94 \cdot 10^6$ |
| **60** | $7{,}41 \cdot 10^6$ |
| **75** | $10{,}81 \cdot 10^6$ |
| **90** | $19{,}61 \cdot 10^6$ |
| **105** | $31{,}58 \cdot 10^6$ |
| **125** | $49{,}88 \cdot 10^6$ |
| **140** | $72{,}2 \cdot 10^6$ |
| **160** | $105{,}6 \cdot 10^6$ |
| **180** | $143{,}5 \cdot 10^6$ |
| **200** | $196{,}0 \cdot 10^6$ |
| **225** | $274{,}0 \cdot 10^6$ |
| **250** | $304{,}7 \cdot 10^6$ |
| **265** | $406{,}8 \cdot 10^6$ |
| **280** | $533{,}4 \cdot 10^6$ |
| **315** | $815{,}0 \cdot 10^6$ |
| **335** | $860{,}0 \cdot 10^6$ |
| **355** | $1197{,}4 \cdot 10^6$ |
| **375** | $1423{,}3 \cdot 10^6$ |

| Coupling size | Torsional Stiffness Values $C_T$ for the SBk/ LBk Coupling Series | | | | | | |
|---|---|---|---|---|---|---|---|
| | Coupling Type | | | | | | |
| | **SBk** | **SBRk** | **SBkD/SBkT** | **LBk** | **LBRkn** | **LBkD/LBkT** | **VLBk** |
| | Nm/rad | Nm/rad | Nm/rad | Nm/rad | Nm/rad | Nm/rad | Nm/rad |
| **32** | – | – | – | $0{,}66 \cdot 10^6$ | $0{,}73 \cdot 10^6$ | $0{,}66 \cdot 10^6$ | $0{,}73 \cdot 10^6$ |
| **38** | $1{,}1 \cdot 10^6$ | $0{,}68 \cdot 10^6$ | $1{,}1 \cdot 10^6$ | $1{,}25 \cdot 10^6$ | $1{,}36 \cdot 10^6$ | $1{,}24 \cdot 10^6$ | $1{,}36 \cdot 10^6$ |
| **48** | $2{,}4 \cdot 10^6$ | $1{,}94 \cdot 10^6$ | $2{,}3 \cdot 10^6$ | $2{,}89 \cdot 10^6$ | $3{,}10 \cdot 10^6$ | $2{,}87 \cdot 10^6$ | $3{,}10 \cdot 10^6$ |
| **60** | $3{,}5 \cdot 10^6$ | $3{,}0 \cdot 10^6$ | $3{,}5 \cdot 10^6$ | $4{,}33 \cdot 10^6$ | $4{,}44 \cdot 10^6$ | $4{,}3 \cdot 10^6$ | $4{,}44 \cdot 10^6$ |
| **70** | $7{,}0 \cdot 10^6$ | $6{,}2 \cdot 10^6$ | $7{,}1 \cdot 10^6$ | $9{,}27 \cdot 10^6$ | $9{,}18 \cdot 10^6$ | $9{,}2 \cdot 10^6$ | $9{,}18 \cdot 10^6$ |
| **80** | $10{,}2 \cdot 10^6$ | $8{,}9 \cdot 10^6$ | $10{,}3 \cdot 10^6$ | $13{,}9 \cdot 10^6$ | $13{,}5 \cdot 10^6$ | $13{,}7 \cdot 10^6$ | $13{,}5 \cdot 10^6$ |
| **90** | $13{,}4 \cdot 10^6$ | $12{,}1 \cdot 10^6$ | $13{,}6 \cdot 10^6$ | $20{,}1 \cdot 10^6$ | $19{,}2 \cdot 10^6$ | $19{,}9 \cdot 10^6$ | $19{,}2 \cdot 10^6$ |
| **100** | $19{,}5 \cdot 10^6$ | $16{,}5 \cdot 10^6$ | $19{,}7 \cdot 10^6$ | $27{,}3 \cdot 10^6$ | $26{,}2 \cdot 10^6$ | $27{,}0 \cdot 10^6$ | $26{,}2 \cdot 10^6$ |
| **110** | $22{,}3 \cdot 10^6$ | $18{,}8 \cdot 10^6$ | $22{,}5 \cdot 10^6$ | $31{,}8 \cdot 10^6$ | $30{,}4 \cdot 10^6$ | $31{,}4 \cdot 10^6$ | $30{,}4 \cdot 10^6$ |
| **125** | $30{,}4 \cdot 10^6$ | $25{,}7 \cdot 10^6$ | $30{,}7 \cdot 10^6$ | $48{,}6 \cdot 10^6$ | $45{,}8 \cdot 10^6$ | $48{,}0 \cdot 10^6$ | $45{,}8 \cdot 10^6$ |
| **140** | $41{,}1 \cdot 10^6$ | $35{,}1 \cdot 10^6$ | $41{,}4 \cdot 10^6$ | $62{,}9 \cdot 10^6$ | $60{,}4 \cdot 10^6$ | $60{,}9 \cdot 10^6$ | $60{,}4 \cdot 10^6$ |
| **160** | $61{,}8 \cdot 10^6$ | $53{,}2 \cdot 10^6$ | $62{,}2 \cdot 10^6$ | $91{,}2 \cdot 10^6$ | $87{,}3 \cdot 10^6$ | $89{,}9 \cdot 10^6$ | $87{,}3 \cdot 10^6$ |
| **180** | $81{,}1 \cdot 10^6$ | $71{,}6 \cdot 10^6$ | $81{,}6 \cdot 10^6$ | $133{,}5 \cdot 10^6$ | $125{,}6 \cdot 10^6$ | $132{,}0 \cdot 10^6$ | $125{,}6 \cdot 10^6$ |
| **200** | $109{,}1 \cdot 10^6$ | $100{,}0 \cdot 10^6$ | $109{,}7 \cdot 10^6$ | $180{,}0 \cdot 10^6$ | $171{,}0 \cdot 10^6$ | $177{,}6 \cdot 10^6$ | $171{,}0 \cdot 10^6$ |
| **225** | $145{,}1 \cdot 10^6$ | $135{,}0 \cdot 10^6$ | $146{,}2 \cdot 10^6$ | $241{,}6 \cdot 10^6$ | $231{,}1 \cdot 10^6$ | $239{,}0 \cdot 10^6$ | $231{,}1 \cdot 10^6$ |
| **250** | $204{,}3 \cdot 10^6$ | | | | | | |
| **265** | $257{,}4 \cdot 10^6$ | | | | | | |
| **280** | $323{,}8 \cdot 10^6$ | | | | | | |
| **315** | $419{,}3 \cdot 10^6$ | | | Values on request | | | |
| **335** | $491{,}6 \cdot 10^6$ | | | | | | |
| **355** | $656{,}4 \cdot 10^6$ | | | | | | |
| **375** | $875{,}4 \cdot 10^6$ | | | | | | |

Subject to change due to technical improvement.

# Torsional Stiffness Data, Weights and Mass Moments of Inertia for Couplings with Spacer

| Coupling Types **SBL u. SRL** Size | Minimum spacer length $L_{min.}$ mm | Torsional Stiffness $C_{T1}$ Nm/rad | Torsional Stiffness $C_{TR}$ Nm · mm/rad | Mass moment of inertia Spacer with $L = L_{min.}$ kgm² | Mass moment of inertia per 10 mm tube length with $L > L_{min.}$ kgm² | Weight Spacer with $L = L_{min.}$ kg | Weight per 10 mm tube length with $L > L_{min.}$ kg |
|---|---|---|---|---|---|---|---|
| 30 | 75 | $0.38 \cdot 10^6$ | $186 \cdot 10^6$ | 0.00401 | 0.00011 | 2.17 | 0.11 |
| 40 | 80 | $0.92 \cdot 10^6$ | $274 \cdot 10^6$ | 0.00876 | 0.00020 | 3.2 | 0.14 |
| 50 | 80 | $1.72 \cdot 10^6$ | $537 \cdot 10^6$ | 0.0146 | 0.00041 | 4.4 | 0.18 |
| 60 | 100 | $2.94 \cdot 10^6$ | $897 \cdot 10^6$ | 0.0368 | 0.00072 | 6.7 | 0.22 |
| 70 | 100 | $4.07 \cdot 10^6$ | $1335 \cdot 10^6$ | 0.055 | 0.00113 | 8.2 | 0.29 |
| 80 | 100 | $6.49 \cdot 10^6$ | $1895 \cdot 10^6$ | 0.075 | 0.0017 | 8.7 | 0.30 |
| 90 | 120 | $8.49 \cdot 10^6$ | $2637 \cdot 10^6$ | 0.138 | 0.0023 | 13.0 | 0.34 |
| 100 | 120 | $10.68 \cdot 10^6$ | $3556 \cdot 10^6$ | 0.159 | 0.0032 | 13.5 | 0.40 |
| 110 | 155 | $12.49 \cdot 10^6$ | $4690 \cdot 10^6$ | 0.292 | 0.0043 | 19.2 | 0.41 |
| 125 | 155 | $17.66 \cdot 10^6$ | $6909 \cdot 10^6$ | 0.423 | 0.0064 | 22.8 | 0.48 |
| 140 | 175 | $24.76 \cdot 10^6$ | $8928 \cdot 10^6$ | 0.783 | 0.0088 | 32.0 | 0.53 |
| 160 | 205 | $36.70 \cdot 10^6$ | $14028 \cdot 10^6$ | 1.46 | 0.014 | 49.0 | 0.7 |
| 180 | 205 | $50.58 \cdot 10^6$ | $23220 \cdot 10^6$ | 2.04 | 0.023 | 52.0 | 0.8 |
| 200 | 240 | $68.69 \cdot 10^6$ | $36882 \cdot 10^6$ | 4.41 | 0.036 | 96.0 | 1.2 |

| Coupling Types **SBLk u. SRLk** Size | Minimum spacer length $L_{min.}$ mm | Torsional Stiffness $C_{T1}$ Type SBLk Nm/rad | Torsional Stiffness $C_{T1}$ Type SRLk Nm/rad | Torsional Stiffness $C_{TR}$ Nm · mm/rad | Mass moment of inertia Spacer with $L = L_{min.}$ kgm² | Mass moment of inertia per 10 mm tube length with $L > L_{min.}$ kgm² | Weight Spacer with $L = L_{min.}$ kg | Weight per 10 mm tube length with $L > L_{min.}$ kg |
|---|---|---|---|---|---|---|---|---|
| 38 | 75 | $0.83 \cdot 10^6$ | $0.57 \cdot 10^6$ | $186 \cdot 10^6$ | 0.00401 | 0.00011 | 2.17 | 0.11 |
| 48 | 80 | $1.51 \cdot 10^6$ | $1.35 \cdot 10^6$ | $274 \cdot 10^6$ | 0.00876 | 0.00020 | 3.2 | 0.14 |
| 60 | 80 | $2.53 \cdot 10^6$ | $2.22 \cdot 10^6$ | $537 \cdot 10^6$ | 0.0146 | 0.00041 | 4.4 | 0.18 |
| 70 | 100 | $4.42 \cdot 10^6$ | $3.96 \cdot 10^6$ | $897 \cdot 10^6$ | 0.0368 | 0.00072 | 6.7 | 0.22 |
| 80 | 100 | $6.48 \cdot 10^6$ | $5.74 \cdot 10^6$ | $1335 \cdot 10^6$ | 0.055 | 0.00113 | 8.2 | 0.29 |
| 90 | 100 | $8.76 \cdot 10^6$ | $7.95 \cdot 10^6$ | $1895 \cdot 10^6$ | 0.075 | 0.0017 | 8.7 | 0.30 |
| 100 | 120 | $11.66 \cdot 10^6$ | $10.23 \cdot 10^6$ | $2637 \cdot 10^6$ | 0.138 | 0.0023 | 13.0 | 0.34 |
| 110 | 120 | $14.41 \cdot 10^6$ | $12.58 \cdot 10^6$ | $3556 \cdot 10^6$ | 0.159 | 0.0032 | 13.5 | 0.40 |
| 125 | 155 | $17.25 \cdot 10^6$ | $15.29 \cdot 10^6$ | $4690 \cdot 10^6$ | 0.292 | 0.0043 | 19.2 | 0.41 |
| 140 | 155 | $24.27 \cdot 10^6$ | $21.45 \cdot 10^6$ | $6909 \cdot 10^6$ | 0.423 | 0.0064 | 22.8 | 0.48 |
| 160 | 175 | $32.35 \cdot 10^6$ | $29.22 \cdot 10^6$ | $8928 \cdot 10^6$ | 0.783 | 0.0088 | 32.0 | 0.53 |
| 180 | 205 | $42.79 \cdot 10^6$ | $39.14 \cdot 10^6$ | $14088 \cdot 10^6$ | 1.46 | 0.014 | 49.0 | 0.7 |
| 200 | 205 | $62.94 \cdot 10^6$ | $58.83 \cdot 10^6$ | $23220 \cdot 10^6$ | 2.04 | 0.023 | 52.0 | 0.8 |
| 225 | 240 | $84.69 \cdot 10^6$ | $79.13 \cdot 10^6$ | $36882 \cdot 10^6$ | 4.41 | 0.036 | 96.0 | 1.2 |

| Coupling Types **LBLk u. LRLk** Size | Minimum spacer length $L_{min.}$ mm | Torsional Stiffness $C_{T1}$ Nm/rad | Torsional Stiffness $C_{TR}$ Nm · mm/rad | Mass moment of inertia Spacer with $L = L_{min.}$ kgm² | Mass moment of inertia per 10 mm tube length with $L > L_{min.}$ kgm² | Weight Spacer with $L = L_{min.}$ kg | Weight per 10 mm tube length with $L > L_{min.}$ kg |
|---|---|---|---|---|---|---|---|
| 32 | 70 | $0.46 \cdot 10^6$ | $90.5 \cdot 10^6$ | 0.0025 | 0.00010 | 1.81 | 0.11 |
| 38 | 70 | $0.73 \cdot 10^6$ | $113.2 \cdot 10^6$ | 0.0036 | 0.00011 | 2.16 | 0.11 |
| 48 | 75 | $1.45 \cdot 10^6$ | $202.4 \cdot 10^6$ | 0.0087 | 0.00020 | 2.36 | 0.14 |
| 60 | 75 | $2.48 \cdot 10^6$ | $410.2 \cdot 10^6$ | 0.015 | 0.00040 | 4.2 | 0.18 |
| 70 | 90 | $4.47 \cdot 10^6$ | $724.0 \cdot 10^6$ | 0.034 | 0.00070 | 6.7 | 0.22 |
| 80 | 90 | $6.83 \cdot 10^6$ | $1140.5 \cdot 10^6$ | 0.050 | 0.0011 | 7.4 | 0.29 |
| 90 | 90 | $9.95 \cdot 10^6$ | $1724 \cdot 10^6$ | 0.065 | 0.0017 | 8.9 | 0.30 |
| 100 | 105 | $12.77 \cdot 10^6$ | $2325 \cdot 10^6$ | 0.128 | 0.0023 | 13.3 | 0.34 |
| 110 | 105 | $15.95 \cdot 10^6$ | $3257 \cdot 10^6$ | 0.14 | 0.0032 | 14.1 | 0.40 |
| 125 | 130 | $20.93 \cdot 10^6$ | $4308 \cdot 10^6$ | 0.28 | 0.0043 | 20.6 | 0.40 |
| 140 | 130 | $28.85 \cdot 10^6$ | $6463 \cdot 10^6$ | 0.38 | 0.0064 | 23.7 | 0.48 |
| 160 | 145 | $39.28 \cdot 10^6$ | $8928 \cdot 10^6$ | 0.69 | 0.0088 | 33.2 | 0.53 |
| 180 | 170 | $55.51 \cdot 10^6$ | $14075 \cdot 10^6$ | 1.34 | 0.014 | 50 | 0.70 |
| 200 | 170 | $80.85 \cdot 10^6$ | $23218 \cdot 10^6$ | 1.96 | 0.023 | 59 | 0.79 |
| 225 | 200 | $111.9 \cdot 10^6$ | $36882 \cdot 10^6$ | 4.1 | 0.036 | 98 | 1.2 |

Subject to change due to technical improvement.

Required details to calculate the torsional stiffness of curved tooth couplings with spacer:

$C_{T1}$ = Torsional stiffness of the complete coupling, including spacer, for length $L = L_{min}$ and bore $d_1;d_{2\ max.}$

$C_{TR}$ = Relative torsional stiffness (Value as per table).

$C_{T3}$ = Torsional stiffness of the complete coupling, including spacer, for length $L > L_{min}$ and bore $d_1;d_{2\ max.}$

The following formula is used for calculating the total torsional stiffness:

$$C_{T3} = \frac{1}{\frac{1}{C_{T1}} + \frac{L - L_{min}}{C_{TR}}} \quad \text{(Nm/rad)}$$

In addition to the torsional stiffness, the tables include the mass moments of inertia and the weights of the spacers.
These values are given for the spacer with a length of $L = L_{min}$ and for spacer part-lengths of 10 mm with $L > L_{min.}$

The total values for spacers with $L > L_{min}$ can be calculated as follows:

$W_{Lmin}$ = Values for spacer with $L = L_{min}$

$W_{10}$ = Values for 10 mm tube length of spacer

$$W_{tot} = W_{Lmin} + \frac{W_{10} \cdot (L - L_{min})}{10}$$

The values for the mass moment of inertia or the weight values may optionally be used for W.


RENK Aktiengesellschaft, Rheine Works · Phone: +49 5971 790 0 · Fax: +49 5971 790 208 and 790 256

# Parallel Misalignment, Torsional Stiffness Data for Curved Tooth Couplings with Intermediate Shaft

Contrary to couplings with spacer, no minimum lengths are specified for intermediate shafts. The tables hence only contain data for the coupling, though taking into account those parts of the intermediate shaft which are located inside the hub seats.

Required details to determine the torsional stiffness of curved tooth couplings with intermediate shaft:

| Coupling Types **SBG/SRG** Size | Torsional Stiffness $C_{T1}$ Nm/rad | $C_{T2}$ Nm/rad |
|---|---|---|
| 30 | $0.48 \cdot 10^6$ | Calculated acc. to the formula on page 51. |
| 40 | $1.19 \cdot 10^6$ | |
| 50 | $2.19 \cdot 10^6$ | |
| 60 | $3.92 \cdot 10^6$ | |
| 70 | $5.56 \cdot 10^6$ | |
| 80 | $8.52 \cdot 10^6$ | |
| 90 | $12.1 \cdot 10^6$ | |
| 100 | $14.2 \cdot 10^6$ | |
| 110 | $18.5 \cdot 10^6$ | |
| 125 | $25.5 \cdot 10^6$ | |
| 140 | $38.7 \cdot 10^6$ | |
| 160 | $57.3 \cdot 10^6$ | |
| 180 | $73.9 \cdot 10^6$ | |
| 200 | $101.2 \cdot 10^6$ | |
| 220 | $150.0 \cdot 10^6$ | |
| 240 | $184.3 \cdot 10^6$ | |
| 260 | $235.6 \cdot 10^6$ | |
| 280 | $299.4 \cdot 10^6$ | |
| 300 | $357.3 \cdot 10^6$ | |
| 320 | $458.5 \cdot 10^6$ | |
| 340 | $620.4 \cdot 10^6$ | |

| Coupling Types **SBGk/SRGk** Size | Torsional Stiffness $C_{T1}$ Nm/rad | $C_{T2}$ Nm/rad |
|---|---|---|
| 38 | $1.02 \cdot 10^6$ | Calculated acc. to the formula on page 51. |
| 48 | $2.08 \cdot 10^6$ | |
| 60 | $3.40 \cdot 10^6$ | |
| 70 | $6.30 \cdot 10^6$ | |
| 80 | $9.15 \cdot 10^6$ | |
| 90 | $12.0 \cdot 10^6$ | |
| 100 | $17.5 \cdot 10^6$ | |
| 110 | $20.0 \cdot 10^6$ | |
| 125 | $27.1 \cdot 10^6$ | |
| 140 | $36.7 \cdot 10^6$ | |
| 160 | $54.9 \cdot 10^6$ | |
| 180 | $72.8 \cdot 10^6$ | |
| 200 | $96.8 \cdot 10^6$ | |
| 225 | $131.9 \cdot 10^6$ | |
| 250 | $180.7 \cdot 10^6$ | |
| 265 | $218.2 \cdot 10^6$ | |
| 280 | $275.1 \cdot 10^6$ | |
| 315 | $347.9 \cdot 10^6$ | |
| 335 | $415.6 \cdot 10^6$ | |
| 355 | $528.1 \cdot 10^6$ | |
| 375 | $705.6 \cdot 10^6$ | |

$C_{T1}$ = torsional stiffness of the coupling with bore $d_3$;$d_{4\ max.}$. This includes the values of the intermediate shaft with a diameter corresponding to $d_1$;$d_{2\ max.}$, but only within the range of the hub lengths D. For the exposed part of the shaft, these data have to be calculated in addition.

$C_{T2}$ = torsional stiffness of the intermediate shaft.

$C_{T3}$ = torsional stiffness of the complete coupling.

The formula below is used to calculate the total torsional stiffness:

$$C_{T3} = \frac{1}{\frac{1}{C_{T1}} + \frac{1}{C_{T2}}} \text{ (Nm/rad)}$$

Normally, the diameter $d_1$; $d_{2\ max.}$ corresponds to the nominal size of the coupling. In the range of the hub length D, shaft diameters which differ from $d_1$;$d_{2\ max.}$ only have an insignificant effect on the total torsional stiffness of the coupling.

| Coupling Types **LBGk/LRGk** Size | Torsional Stiffness $C_{T1}$ Nm/rad | $C_{T2}$ Nm/rad |
|---|---|---|
| 32 | $0.69 \cdot 10^6$ | Calculated acc. to the formula on page 51. |
| 38 | $1.25 \cdot 10^6$ | |
| 48 | $2.64 \cdot 10^6$ | |
| 60 | $4.16 \cdot 10^6$ | |
| 70 | $7.98 \cdot 10^6$ | |
| 80 | $12.1 \cdot 10^6$ | |
| 90 | $16.9 \cdot 10^6$ | |
| 100 | $23.5 \cdot 10^6$ | |
| 110 | $27.3 \cdot 10^6$ | |
| 125 | $40.5 \cdot 10^6$ | |
| 140 | $52.6 \cdot 10^6$ | |
| 160 | $76.6 \cdot 10^6$ | |
| 180 | $112.1 \cdot 10^6$ | |
| 200 | $147.9 \cdot 10^6$ | |
| 225 | $206.6 \cdot 10^6$ | |

The maximum permissible static parallel misalignment depends on the permissible angular misalignment and on the tooth center distance between both coupling halves. This distance may be varied for couplings with spacer or intermediate shaft. The dimension tables, therefore, do not contain data on the permissible misalignment.

The formulae stated below can be used to determine these values.

1) The same formulae are used for couplings with retaining ring and for comparable designs without retaining ring. However, the factor 0.010 must be inserted before the bracket.

**Couplings with spacer,** without retaining ring [1)]

C = length of coupling half acc. to dimension table

L = distance between the flange faces of the spacer

H = length of the coupling sleeve acc. to dimension table

Series SBL

$$\Delta_{Kr} = 0.026 \cdot (1.6 \cdot C + L)$$

Series SBLk

$$\Delta_{Kr} = 0.013 \cdot (1.6 \cdot H + L)$$

Series LBLk

$$\Delta_{Kr} = 0.013 \cdot (H + L)$$

**Couplings with intermediate shaft,** without retaining ring [1)]

L = total length of intermediate shaft, including hub seats

D = length of coupling hub acc. to dimension table

Series SBG

$$\Delta_{Kr} = 0.026 \cdot (L - 1.6 \cdot D)$$

Series SBGk*

$$\Delta_{Kr} = 0.013 \cdot (L - 1.4 \cdot D)$$

Series LBGk

$$\Delta_{Kr} = 0.013 \cdot (L - 0.66 \cdot D)$$

* only applicable to couplings up to size 225.

Subject to change due to technical improvement.

# Keyway Sealing, Tooth Backlash Control Device

## Keyway Sealing

With keyed shaft-hub connections, the inner hub sides of the curved tooth couplings must be sealed to prevent loss of oil or grease. This is particularly important for couplings with retaining ring, which have a higher lubricant level than the basic models. Suitable packing means are lead, synthetic resin or other oil and grease resistant sealing products.

Sealing may be accomplished as shown below.
For non-continuous keys, designs according to Fig. 1 or 2 are preferred.

The recess in the hub provides a run-out for the keyway, thus maintaining the sealing surface between the hub and the shaft.

There is no sealing surface, if continuous keys are used. In such a case, we recommend a solution with sealing covers as shown in Fig. 3 and 4. Please specify the required design in your enquiry or order.

Fig. 1

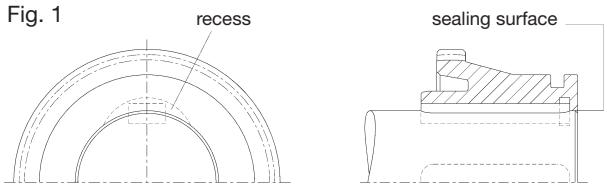


Fig. 2

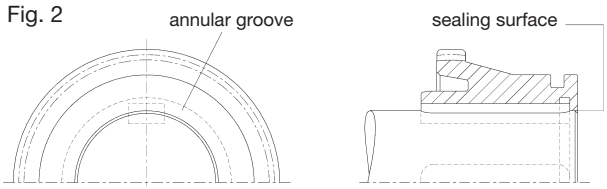


Fig. 3

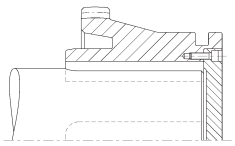

Fig. 4

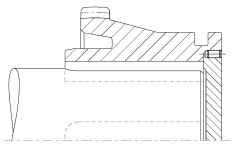

## Tooth Backlash Control

The tooth backlash control device for curved tooth couplings allows quick and easy inspection of the coupling teeth at the site of installation. It is not necessary to disassemble the coupling.

The backlash of the inner and outer teeth is measured directly at the tooth mesh. Eventual changes can easily be detected by comparing the results of the measurements with the specified values. Hence, the current state of the coupling can be evaluated without difficulty at any time.

Such regularly performed inspections ensure permanent operational dependability of the coupling.

The backlash control device consists of an inspection opening in the coupling sleeve, which is closed by a screw with a gasket. It is located above the center of the curved teeth. It is optionally possible to arrange several of these openings around the coupling circumference.

The screw is removed to perform the inspection. By turning the outer sleeve, the tooth flanks are brought into contact on one side. The backlash between the exposed tooth flanks to the curved tooth center is then measured. The use of a feeler gauge is recommended. If the tooth flanks do not come into contact on one side, the total backlash is determined by adding up the flank clearance of both sides.

The following coupling series of this catalogue can be equipped with a tooth backlash control device:

SB, SBk
SBR, SBRk
SBL, SBLk
SRL, SRLk
SBG, SBGk
SRG, SRGk
SBD, SBkD
SBT, SBkT
VSB

The comparable types of the LBk series and HBk couplings can also be equipped with a backlash control device, but this involves more complex measures.

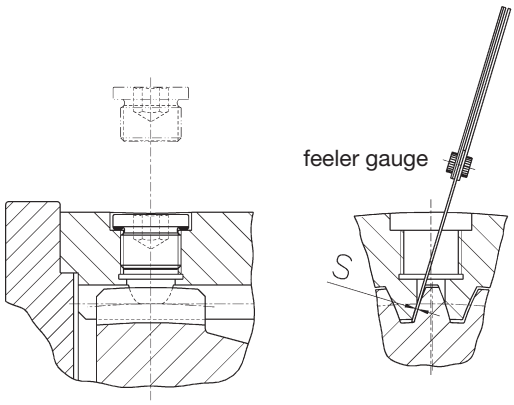



RENK Aktiengesellschaft, Rheine Works · Phone: +49 5971 790 0 · Fax: +49 5971 790 208 and 790 256

# Shaft - Hub Connections

Fig. 1

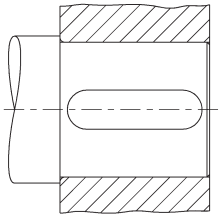

Fig. 2

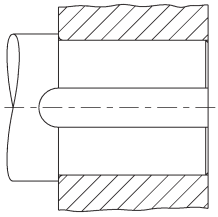

Fig. 3

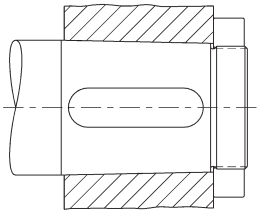

Fig. 4

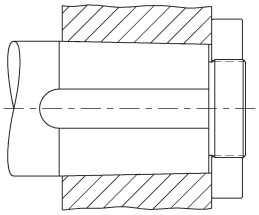

Fig. 5

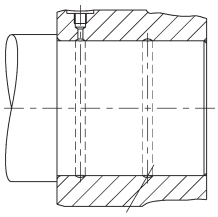

Fig. 6

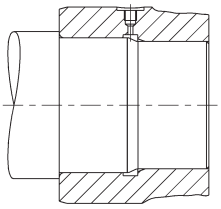

Fig. 7

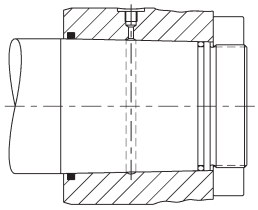

Fig. 8

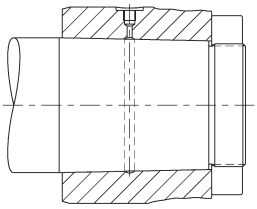

| Fig. | 1 | 2 | 3 | 4 | 5 | 6 | 7 | 8 |
|---|---|---|---|---|---|---|---|---|
| Utilization of space | ◐ | ○ | ◐ | ○ | ○ | ◐ | ◐ | ○ |
| Production | ◐ | ◐ | ◐ | ◐ | ○ | ● | ◐ | ○ |
| Insensitiveness to damage | ○ | ○ | ○ | ○ | ◐ | ◐ | ○ | ◐ |
| Operation quality | ◐ | ◐ | ◐ | ◐ | ○ | ○ | ○ | ○ |
| Axial positioning | ○ | ○ | ◐ | ◐ | ○ | ○ | ◐ | ◐ |
| Transfer of force | ◐ | ◐ | ◐ | ◐ | ○ | ○ | ◐ | ○ |
| Installation, warm | ○ | ○ | ○ | ○ | ○ | ○ | ● | ○ |
| Installation, cold | ● | ● | ◐ | ◐ | ● | ● | ○ | ○ |
| Removal | ● | ● | ◐ | ◐ | ◐ | ○ | ◐ | ○ |

○ favorable ◐ neutral ● less favorable

# Curved Tooth Couplings

## Special Designs

Fig. 1

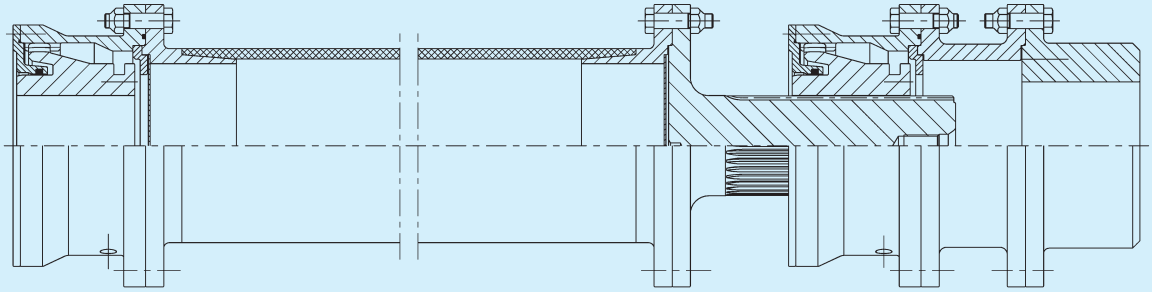

Fig. 2

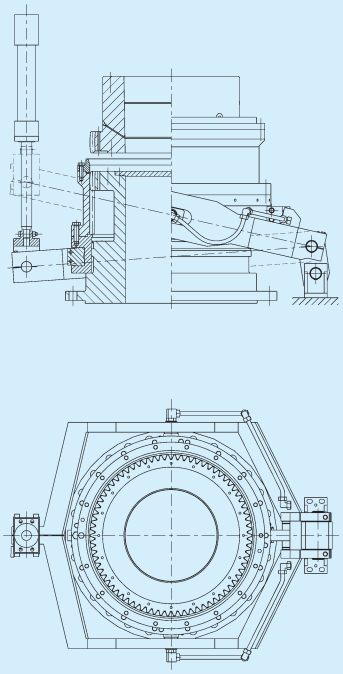

Fig. 3

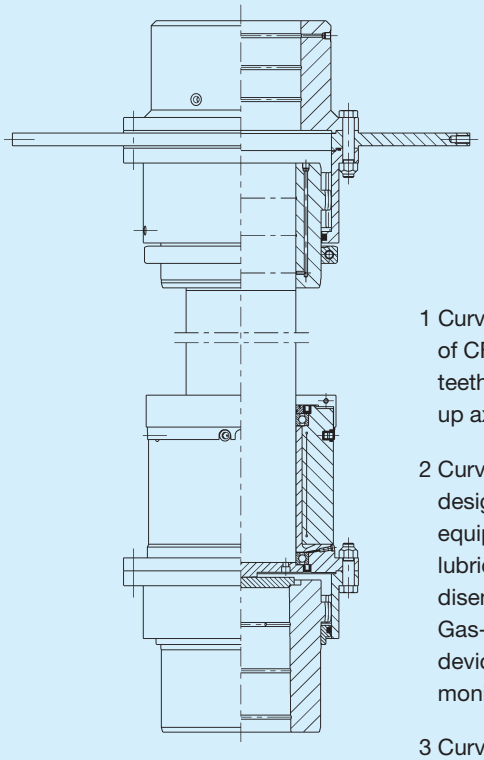

Fig. 4

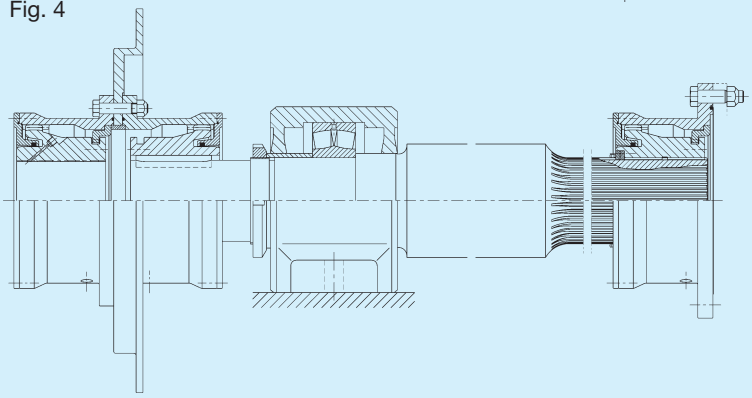

1 Curved tooth coupling with spacer of CFP/ GFP. Flange shaft with gear teeth according to DIN 5480 to take up axial displacement.

2 Curved tooth coupling of vertical design for a water power plant, equipped for oil injection lubrication, can be engaged and disengaged at standstill. Gas-nitrided gear teeth. Shifting device with hydraulic cylinder and monitoring sensors.

3 Curved tooth coupling with HYGUARD® safety coupling and brake disk, for vertical installation between motor and thruster. Gas-nitrided gear teeth.

4 Curved tooth coupling with intermediate shaft, pedestal bearing and brake disk, suitable to take up axial displacement.


RENK Aktiengesellschaft, Rheine Works · Phone: +49 5971 790 0 · Fax: +49 5971 790 208 and 790 256

Fig. 5

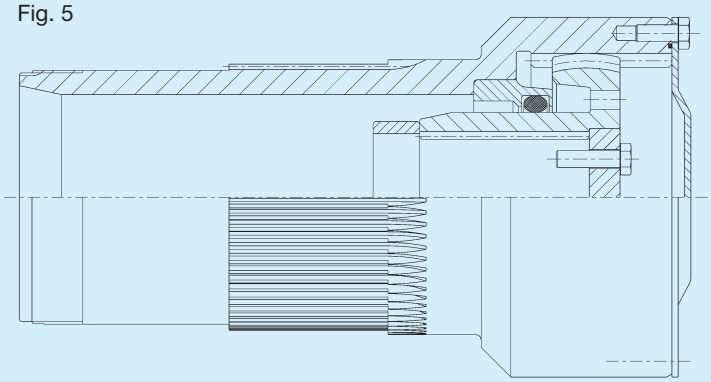

Fig. 6

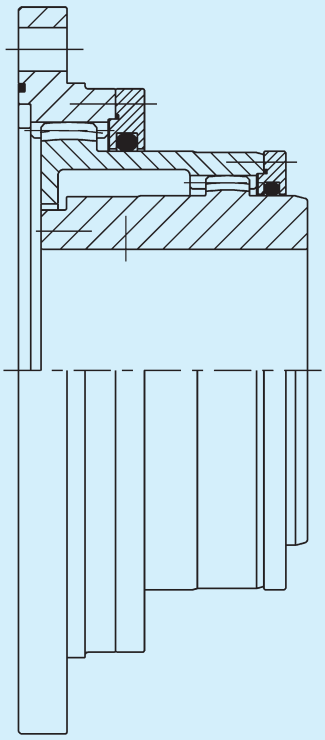

Fig. 7

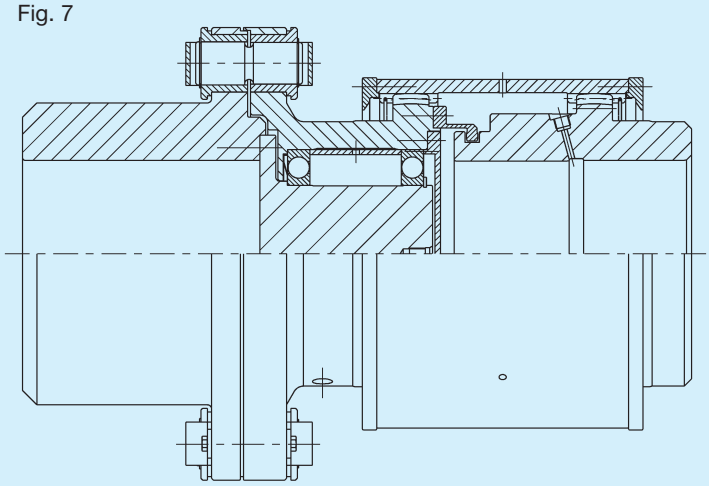

Fig. 8

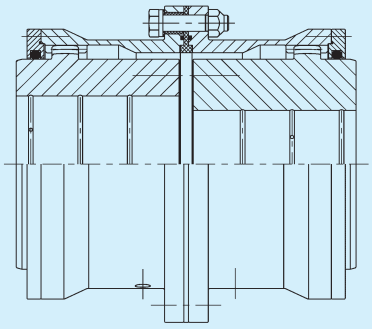

Fig. 9

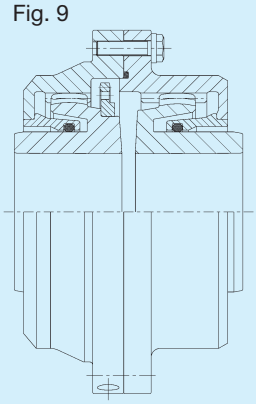

5 Curved tooth coupling for special vehicles.

6 Curved tooth coupling of short, double engagement construction form.

7 Curved tooth coupling with shear pin part, equipped for flow lubrication.

8 Curved tooth coupling electrically insulated.

9 Curved tooth coupling coupling for rail vehicles.

# HYGUARD® Safety Couplings with Torque Limitation

## Safety with HYGUARD®

HYGUARD® is a hydraulic safety element to protect machinery against overloads. In combination with curved tooth couplings, HYGUARD® works like a safety coupling with torque limitation. The release torque is adjustable and remains constant throughout the entire operation time.

## Function Principle

HYGUARD® consists of two bushes being inserted into each other and which are pressure-tight closed at both ends. The little gap between these two parts is filled with hydraulic oil through a valve bore and then pressurized. This leads to an expansion in diameter. When mounted in between a shaft and a hub, HYGUARD® works like a clamping bush. The torque is transmitted by frictional engagement between the contact faces. The oil pressure in the annular gap is decisive for the torque transmission capacity. This pressure is adjustable, and hence, the torque, too.

## Benefits

The combination of curved tooth couplings with HYGUARD® features many advantages:

- Transmission of high torques within little space
- Torsionally stiff-articulated shaft connection
- Overload protection with adjustable torque limitation
- Constant release torque throughout the entire operation time
- No interruption of operation due to material fatigue
- Low down-time costs
- Fast re-commissioning
- No cost-intensive stocking of spare parts

HYGUARD® protects valuable machinery.

## Basic Designs

The basic type of the HYGUARD® safety coupling is the B-design. Due to the compact dimensions, this coupling can be combined with the most diverse drive elements without affecting their torque transmission capacity.
The HYGUARD® coupling sleeve is equally suitable for clamping fixed as well as rotating elements.

After a release, the coupling sleeve acts like a slide bearing. Circumferential speeds of up to 1.5 m/s at the sliding surface are possible. Therefore, the B-types are preferably installed in low-speed drives.
The BW-types are used for drive applications involving higher speeds. This series principally corresponds to the basic design, but is additionally equipped with roller bearings. In contrast to the slide bearing version, this model is primarily selected for applications where sliding velocities above 1.5 m/s are to be anticipated after a release. The space requirement is, however, almost the same as for the B-types. Roller bearings are not required, if it is the question of a mere clamping function.

**B-Series**

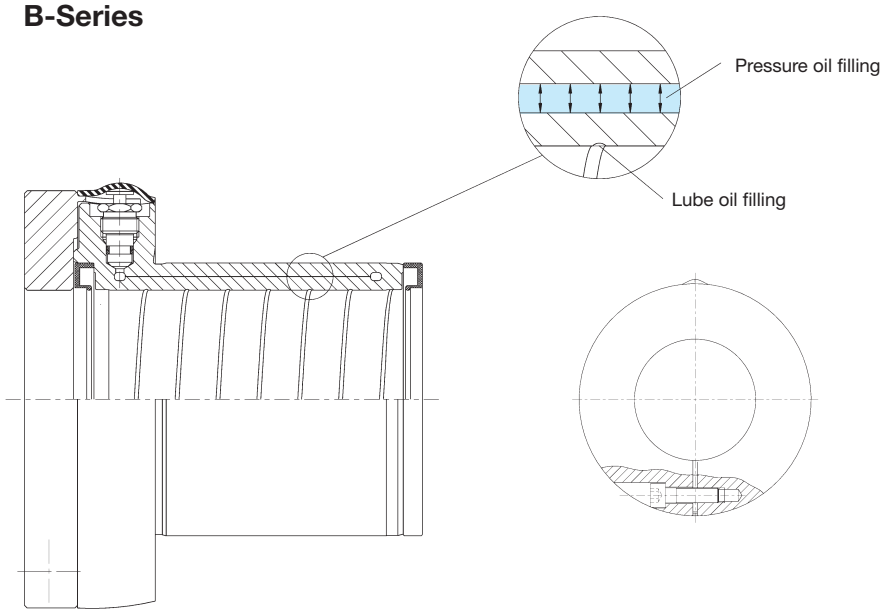


**BWL-Series**

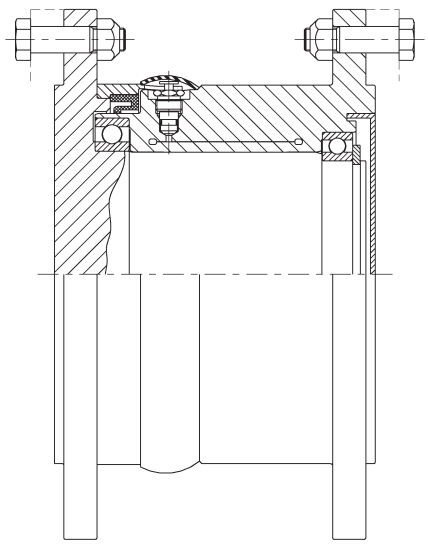

## BWL-Series

HYGUARD® safety couplings of the BWL-series consist of the shaft part and the bush, and make up a complete coupling unit. They are equipped with connecting flanges on both sides, so that they can also be used as a spacer for curved tooth couplings or other connection elements. In this way, the benefits of the curved tooth couplings and those of the HYGUARD® safety system are combined to form a flexible safety coupling with torque limitation. It is also of advantage that the HYGUARD® Type BWL, like a spacer, can be assembled with already installed coupling halves.


RENK Aktiengesellschaft, Rheine Works · Phone: +49 5971 790 0 · Fax: +49 5971 790 208 and 790 256

# Curved Tooth Couplings
# HYGUARD® Safety Couplings

## Release

Two components are of essential importance for safe release: the shear ring and the shear tube. The shear ring and the shaft are rigidly connected, whereas the shear tube is accommodated in the movable part. If the operation torque exceeds the pre-determined value, the safety element starts to slide on the profiled surface. This results in a relative movement between the shaft and the hub, with the shear ring cutting off the shear tube. The system is depressurized within milliseconds and the connection is released. HYGUARD® protects through rapidness.

## Re-commissioning

HYGUARD® is easy to activate again. A high-pressure pump and hydraulic oil are needed only. The pump is connected with the injector and hydraulic oil pressed into the ring gap, while the shear tube is open. It is advisable to use a pump with a pressure-regulating valve. If the pre-defined pressure for torque transmission is obtained, close the shear tube. The pressure chamber is now sealed hermetically and the working pressure remains constant. HYGUARD® is ready to operate.

**LBk-BW combination**

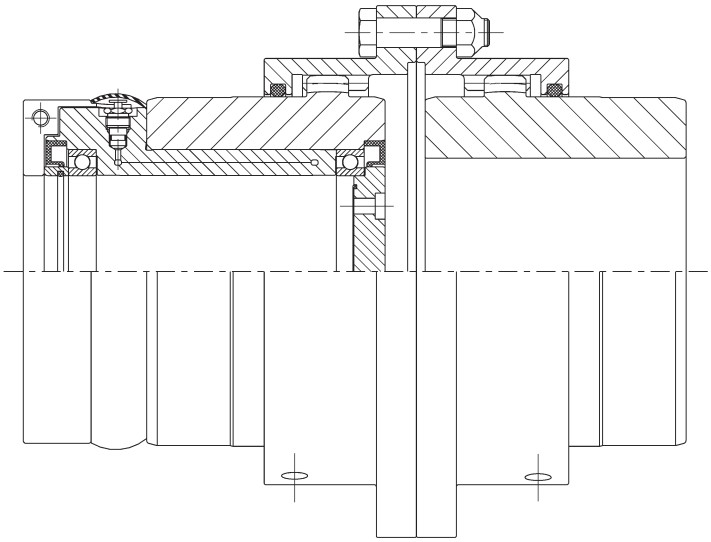

**SBLk-BWL combination**

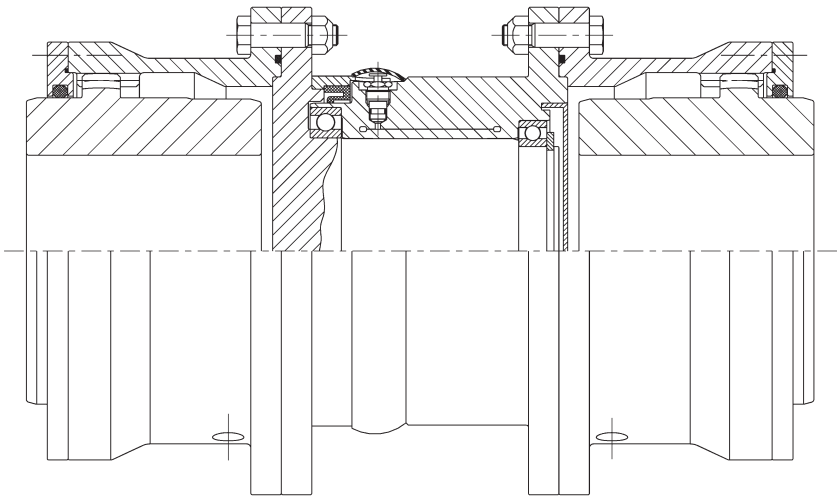

## Application

HYGUARD® is a versatile machinery element and suitable for the most diverse applications. In rolling mills, for example, where conventional couplings with shear pins or similar safety elements had been used hitherto, HYGUARD® has contributed to substantial cost savings.

HYGUARD® is also ideal for machines and plants which have not yet been protected, or have only been protected to an insufficient extent. In most cases, the appropriate devices were missing, or the expenditure of work and costs was just too great. HYGUARD® is particularly suited for applications such as longitudinal shafts of paper mills, drawing rollers in the fiber industry, circular clamps of any kind, or solid matter pumps. All those driving machines where overloads or jams may be expected belong to the preferred application fields of HYGUARD®.

HYGUARD® becomes controllable in combination with a differential speed control device. This device releases an alarm or disengages automatically, if the connection is separated due to an overload, and a differential speed exists between the shaft and the hub.

HYGUARD® does not only protect machines, the TORLOC® version also fulfills clamping tasks. Whenever quick and safe clamping of machinery parts is essential, TORLOC® offers itself as a clamping element. It is used as a quick-grip coupling in test stands, or as a clamping coupling with fine adjustment feature in machine tools and production machines.

More information and technical details are contained in our HYGUARD® Safety Coupling catalog.

# Technical Information

## Directive 94/9/EC ‘ATEX’

## Couplings for use in potentially explosive atmospheres

Machines intended for use in potentially explosive areas must fulfill particular requirements.

RENK is able to supply couplings for the equipment group II, category 2 or 3, according to Directive 94/9/EC.

The categories specify various conformity assessment procedures. Contrary to electrical equipment, EC type examinations are not imperative for category 2. It is sufficient to deposit the technical documentation with a Notified Body.

It is at the manufacturer’s discretion to arrange for type examinations. RENK is presently in the process of having type examinations carried out for the individual coupling series.

Directive 94/9/EC

This guideline, also known as ‘ATEX’, describes the requirements for equipment, components and protective systems intended for use in potentially explosive atmospheres. This directive has been binding since July 30th, 2003.

Today, this directive is not only applicable to electrical equipment, but to non-electrical equipment, too. Couplings are also subject to this directive.

Contrary to the Machinery Directive, a coupling is to be regarded as equipment within the scope of the 94/9/EC directive. The conformity of the equipment to the 94/9/EC directive is confirmed by the CE marking on the product and the declaration of conformity.

The particularities to be observed when using the individual coupling series in potentially explosive atmospheres are described in supplementary instruction manuals.

**Attention:**
**It is imperative to observe the instructions contained in these supplementary manuals!**

Upon request, supplementary manuals can be furnished for the coupling types listed in Table 1.

The operator of the equipment has to define the required equipment category and the temperature class for the product.

Table 1 contains the maximum possible explosion protection for the individual coupling series.

Fur further details, please contact RENK.

Maximum explosion protection of the coupling series

| Coupling Series* | Type Examination | Equipment Category | | Explosion Group | Temperature Class D | G | Ambient Temperature | Supplementary Manual |
|---|---|---|---|---|---|---|---|---|
| **SB** | x | 2G | | IIB | | T4 | $-20°C \leq T_a \leq 60°C$ | B008027 |
| **SBk, LBk, HBk** | x | 2G | | IIB | | T3 | $-20°C \leq T_a \leq 60°C$ | B008027 |

Other types upon request

* valid for all the models of the respective coupling series

Example for a CE-marking of a coupling

| CE | Ex | II | 2G | c | IIB | T4 | X | $-20°C \leq T_a \leq 60°C$ |
|---|---|---|---|---|---|---|---|---|
| *CE-mark* | *EX-mark* | *equipment group* | *equipment category* | *type of ignition* | *explosion group* | *temperature class* | *mark for particular instructions* | *ambient temperatures* |


RENK Aktiengesellschaft, Rheine Works · Phone: +49 5971 790 0 · Fax: +49 5971 790 208 and 790 256

# Calculation Formulae

**1. Bending Critical Speed**

Rough calculation of the bending critical speed of intermediate shafts, spacers and hub sleeves

$$n_k = 300 \cdot \sqrt{\frac{78.3 \cdot E \cdot I_{axial}}{G_1 \cdot l_0^4}}$$

$n_k$ = bending critical speed, rpm
$n$ = operation speed, rpm
$E$ = module of elasticity = $20.6 \cdot 10^4$ N/mm²
$G_1$ = weight per 1 mm of length, kg/mm (see item 5)
$l_0$ = tooth center distance, mm
$I_{axial}$ = (see item 4)

permissible for sub-critical operation
$n \leq 0.75 \cdot n_k$

for over-critical operation
$n \geq 1.35 \cdot n_k$

**2. Torsional stiffness $C_{T2}$** for intermediate shafts

$$C_{T2} = \frac{I_{pol} \cdot G}{l \cdot 1000}$$

$C_{T2}$ = torsional stiffness of the intermediate shaft Nm/rad
$G$ = shear modulus = $7.95 \cdot 10^4$ N/mm²
$l$ = length of intermediate shaft, mm
$l$ = $L - 2 \cdot D$
$I_{pol}$ = (see item 4)

**3. Mass moment of inertia J**

Applicable to the shaft:

$$J = \frac{G_2 \cdot d^2}{8 \cdot 10^6}$$

Applicable to the spacer (tube):

$$J = \frac{G_2 \cdot (d_a^2 + d_i^2)}{8 \cdot 10^6}$$

$J$ = mass moment of inertia, kgm²
$G_2$ = weight, kg (see item 5)
$d$ = shaft diameter, mm
$d_a$ = outer diameter of spacer, mm
$d_i$ = inner diameter of spacer, mm

**4. Geometrical moment of inertia I**

Applicable to the shaft:

$$I_{axial} = \frac{d^4}{20.37}$$

Applicable to the spacer (tube):

$$I_{axial} = \frac{d_a^4 - d_i^4}{20.37}$$

$I_{axial}$ = axial geometrical moment of inertia, mm⁴
$d$ = shaft diameter, mm
$d_a$ = outer diameter of spacer, mm
$d_i$ = inner diameter of spacer, mm
$I_{pol}$ = polar geometrical moment of inertia, mm⁴

$$I_{pol} = 2 \cdot I_{axial}$$

**5. Weight $G_2$**

Applicable to the shaft:

$$G_2 = \frac{d^2 \cdot 6.165 \cdot l}{10^6}$$

Applicable to the spacer (tube):

$$G_2 = \frac{(d_a^2 - d_i^2) \cdot 6.165 \cdot l}{10^6}$$

$G_2$ = weight, kg (see item 5)
$d$ = shaft diameter, mm
$d_a$ = outer diameter of spacer, mm
$d_i$ = inner diameter of spacer, mm
$l$ = length, mm
$G_1$ = weight per 1 mm length, kg/mm

$$G_1 = \frac{G_2}{l}$$

**6. Circumferential speed**

$$V = \frac{d \cdot n}{19100}$$

$V$ = circumferential speed, m/s
$d$ = brake disk diameter, mm
$n$ = operation speed, rpm

# Further products of our range of couplings

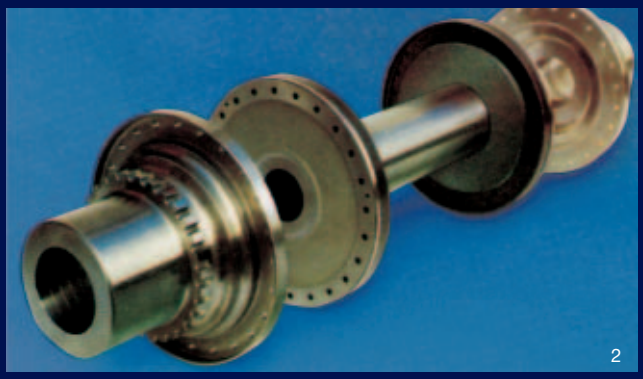

1 Curved Tooth Coupling with hardened and ground inner and outer teeth, tooth-by-tooth injection lubrication

2 High-Speed Diaphragm Coupling Type MCN

3 Raflex® Steel Disk Coupling Type MTP acc. to API 610

4 HYGUARD® Safety Coupling Type BWL

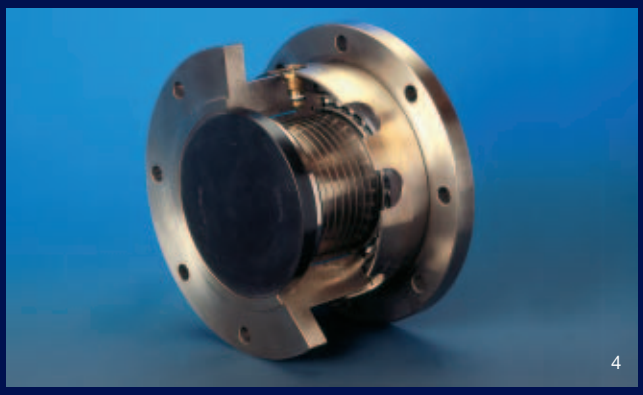


A.Z. Hollink Benelux
Tweelingenlaan 63
7324BK Apeldoorn
The Netherlands
T:+31(0)88 1200 300
E:info@azhollinkgroup.com
W:www.azhollink.nl

A.Z. Hollink SA
P.O. Box 1217
New Redruth
Alberton
South Africa
T:+27 11 907 0477
T:+27 82 825 3880
E:info@azhollink.co.za
W:www.azhollink.co.za


Neudruck RR 070/06.08-3e · 081373