Innovative Power Transmission

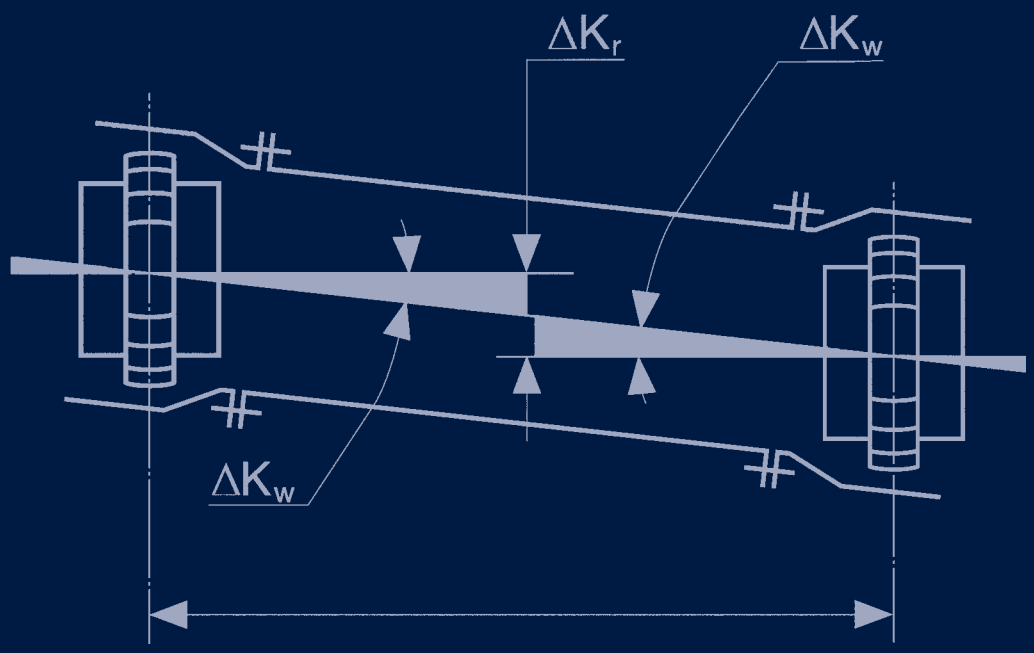

Curved Tooth Couplings
Basic Construction Series

owner's choice

Curved Tooth Couplings
Basic Construction Series

Production process

The production process of the curved tooth couplings was invented by **Albert Tacke** more than 60 years ago and was already patented in 1939.

The worldwide use of the curved tooth coupling in all fields of technology provides proof of the high recognition and capability of this coupling design.

We offer the most comprehensive range of couplings worldwide. The multitude of construction series and options allows complete freedom to engineer the proper shaft connection for your particular application. It also gives you the certainty to select the optimum solution, even for the most severe operation conditions.

A coupling range with a system behind it

Divided into three groups with different constructional features, this product range offers an extensive variety of diverse construction forms. The range is divided into three groups, because each applications has its specific demands on a shaft connection. These requirements can often be met with simple solutions, but sometimes, more complex designs are required. Yet, the main objective is to find the optimum solution in technical as well as in economic terms.

Quality

Prime quality is a matter of fact. This applies equally to all the coupling designs. Constructional differences do not have any influence on the quality of the coupling or on its constituent parts. All the components are produced in compliance with the same strict quality standards. Many of the coupling types are composed of identical, fully interchangeable components.

2

Improvements

- The nominal size of the coupling is no longer synonymous with the maximum permissible hub bore.
- Larger hub bore capacities allow a more favorable coupling size selection.
- Higher permissible angular misalignment capacity provides added safety in the event of shaft offset.
- Precise and subtle size determination due to the application of service factors.
- Re-structured product range ensures simplified coupling selection.

1

3

1 Gear slotting machine for the production of internal curved teeth

2 Assembly of curved tooth couplings®

3 Tooth milling machine with automatic workpiece transfer

Lubricants

The couplings of the SB series can either be lubricated with oil or with grease. The advantage of oil lubrication is that the lubricant can be replaced in a quicker and easier manner. On top of this, the SB coupling types have a larger space for the lubricant. Lubrication is ensured even in case of a damaged sealing. This equally applies to oil and grease lubrication.

Availability

The basic designs of the coupling sizes, up to 200 and 225, resp., are available from stock. Depending on the construction series, this covers hub bore diameters from 12 mm to max. 260 mm. This also applies to coupling designs with spacer or intermediate shaft, but without any additional parts. Even couplings that are subject to the acceptance by the classification societies ABS, DNV, GL or LRS are not exempt from this.

Ex-stock delivery means quick help in the event of an average.

4

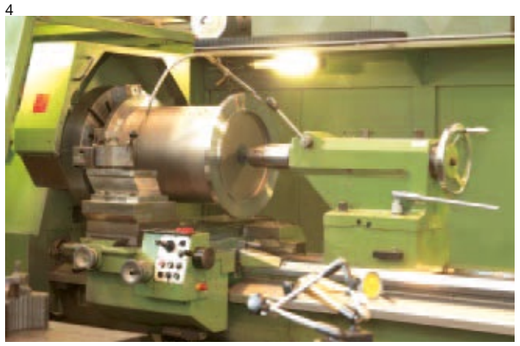

6

Custom-made designs

Irregardless of the quantity, special designs can be supplied in any size. The distinction is made between modified standard types and custom-made designs. Modified coupling models are mainly composed of elements from the basic construction types which are slightly modified or equipped with accessory components. Special designs are usually completely custom-made couplings. Examples from the comprehensive range of special designs are shown on pages 46-47.

5

7

4 Machining of a spacer on a universal turning lathe

5 CNC drilling machine

6 Coupling sleeves

7 Coupling hubs of the curved tooth coupling type VLBGkT 200 spec. for use in vertical thruster drives

Quality Features

Construction Series

SB

- Technically complex design
- Split housing with bolted-on covers
- Advanced cover design for high misalignment capacity
- Misalignment capacity of ± 1.5° per coupling half, for special designs up to ± 3°
- Optionally available for oil or grease lubrication
- Low strain on seal rings due to optimum arrangement in the sleeve cover
- Large lubricant space in leak-proof design
- Lubrication is ensured, even with damaged seal ring
- Easy replacement of seal rings
- Tooth tip centered, optionally available with cover centering
- Large tooth center distance
- Combinable with HYGUARD® safety couplings, brake disks, torque metering shafts or other accessory equipment.

SBk

- Split housing with bolted-on covers
- Misalignment capacity of ± 0.75° per coupling half
- Grease lubrication, optionally with long-life grease filling
- Easy replacement of seals due to removable covers
- Tooth tip centered
- Large tooth center distance
- Large hub bores
- Reversible hubs to serve different shaft distances
- Combinable with HYGUARD® safety couplings, brake disks, torque metering shafts or other accessory equipment

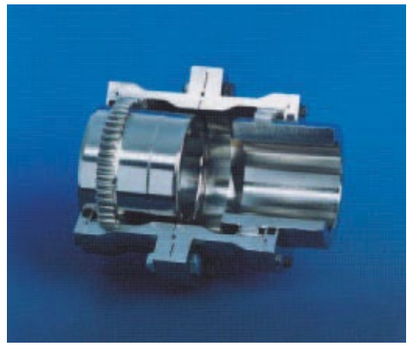

LBk

- Split housing
- Misalignment capacity of ± 0.75° per coupling half
- Grease lubrication, optionally with long-life grease filling
- Tooth tip centered
- Large hub bores
- Low weight due to compact and lightweight sleeve
- Variable overall length, hubs can be shortened
- Combinable with HYGUARD® safety couplings, brake disks, torque metering shafts or other accessory equipment

Table of Contents

Overview

Coupling Configurations	Design	Type Series	Page
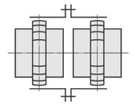	Basic design	SB	8- 9
		SBk	10-11
		LBk	12
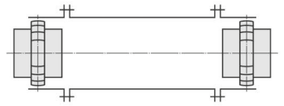	Basic design with retaining ring	SBR	13
		SBRk	14
		LBRkn	15
	Spacer design	SBL	16
		SBLk	17
		LBLk	18
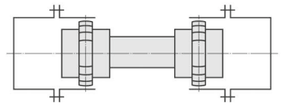	Spacer design with retaining ring	SRL	19
		SRLk	20
		LRLkn	21
	Intermediate shaft design	SBG	22
		SBGk	23
		LBGk	24
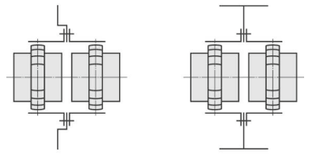	Intermediate shaft design with retaining ring	SRG	25
		SRGk	26
	Design with brake disk for shoe brake	SBD	27
		SBkD	29
		LBkD	31
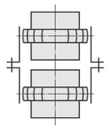	Design with brake disk for disk brake	SBT	28
		SBkT	30
		LBkT	32
	Vertical design for oil or grease lubrication	VSB	33
	For grease lubrication only	VLBk	34
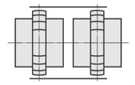	Design with one-piece coupling sleeve	HBk (TRAVEX®)	35

Technical Data

Curved tooth couplings - classification to standard motors	36
Adaptor plates, puller threads for the SB type series	37
Adaptor plates, puller threads for the SBk type series	38
Adaptor plates, puller threads for the LBk type series	39
Lubricant quantities for spacers	40
Torsional stiffness data for couplings, spacers, intermediate shafts	41-43
Weights and mass moments of inertia of spacers	42
Parallel misalignment in case of larger hub distances	43
Keyway sealing and tooth backlash control device	44
Shaft-hub connections	45
Special designs	46-47
HYGUARD® Safety Couplings	48-49
EU Directive 94/9 EG “ATEX”	50
Calculation formulae	51

Coupling Selection and Size Determination

Table 1 - Service Factors

Machine	Service Factor K_1 [1]
Excavator	
Chain bucket excavators	2.0
Travelling gear (caterpillar)	1.8
Travelling gear (rails)	1.6
Suction pumps	1.6
Bucket wheels	1.8
Cutter heads	2.0
Slewing gear	1.4
Winches	1.6
Mining, stones	
Crushers	2.24
Rotary kilns	1.8
Mine ventilators	2.0
Vibrators	1.6
Chemical plant	
Agitators (thin liquid)	1.25
Agitators (viscous liquid)	1.6
Centrifuges (light)	1.4
Centrifuges (heavy)	1.8
Conveyor plants	
Conveyors	1.8
Slatted conveyors	1.6
Belt conveyors (bulk materials)	1.4
Slatted conveyors (piece goods)	1.6
Pocket belt conveyors	1.25
Bucket chain conveyors	1.4
Rotary conveyors	1.4
Elevators	1.4
Bucket type flour conveyors	1.25
Lifts	1.8
Apron conveyors	1.4
Screw conveyors	1.4
Steel belt conveyors	1.4
Redler conveyors	1.4
Blowers, ventilators	
Rotary piston blowers	1.4
Blowers (axial and radial)	1.25
Cooling tower ventilators	1.4
Induced draught fans	1.4
Turbo-blowers	1.25
Generators, converters	
Frequency converters	2.24
Generators	1.4
Welding generators	2.24
Rubber and plastics machinery	
Extruders	1.6
Calenders	1.6
Kneader machines	1.8
Mixers	1.8
Rolling plant	1.8

Machine	Service Factor K_1 [1]
Wood processing machines	
Debarking drums	1.8
Planers	1.4
Frame saws	1.4
Steel plants	
Blast furnace blowers	1.4
Converters	2.0
Inclined blast furnace elevators	1.8
Slag crushers	1.8
Cranes	
Luffing gear	1.25
Traversing gear	1.6
Hoists	1.4
Slewing gear	1.4
Winches	1.25
Metalworking	
Press brakes	1.6
Sheet straighteners	1.8
Hammers	1.8
Shears	1.6
Forging presses	1.8
Stamping machines	1.8
Mills	
Hammer mills	2.0
Ball mills	2.0
Suspended roller mills	2.0
Impact mills	2.0
Rod mills	2.0
Roller mills	2.0
Food machinery	
Fillers	1.25
Kneading machines	1.4
Packaging machines	1.25
Sugar cane crushers	1.6
Sugar cane cutters	1.6
Sugar cane mills	1.8
Sugar beet cutters	1.6
Sugar beet washing plant	1.6
Paper machines	
Couch presses	1.8
M.G. cylinders	2.0
Reels	1.8
Beating engines	1.6
Pulp grinders	1.8
Calenders	1.6
Wet presses	1.8
Opening machines	1.8
Agitators	1.8
Suction presses	1.6
Suction couch rolls	1.8
Drying cylinders	2.0

Machine	Service Factor K_1 [1]
Presses	
Folding presses	1.8
Briquetting presses	2.5
Eccentric presses	2.0
Forging presses	2.25
Brick moulding presses	2.5
Pumps	
Centrifugal pumps (thin liquid)	1.25
Centrifugal pumps (viscous liquid)	1.4
Reciprocating pumps (U≤1:100)	1.8
Reciprocating pumps (U=1:100-200)	1.6
Plunger pumps	2.0
Sludgers	1.4
ELMO-Vacuum pumps	1.5
Textile machines	
Winders	1.6
Printing and drying machines	1.6
Tanning vats	1.6
Calenders	1.6
Opening machines	1.6
Weaving looms	1.6
Compressors	
Reciprocating piston compressors (U≤1:100)	2.0
Reciprocating piston compressors (U=1:100-200)	1.6
Turbo compressors	1.6
Rolling mills	
Sheet metal shears	1.8
Sheet turning machines	1.6
Ingot slab mills	2.0
Block conveyors	1.8
Block pushers	2.0
Tape and wire reels	1.4
Descalers	1.6
Sheet mills	1.8
Plate mills	2.0
Cold rolling mills	2.0
Track-type tractors	1.6
Billet shears	1.8
Colling beds	1.4
Transfer skids	1.4
Roller tables (light)	1.4
Roller tables (heavy)	1.8
Roller levellers	1.6
Trimming shears	1.4
End shears	1.8
Looplifters	1.4
Roller control gear	1.4

1) The service factor K_1 is applicable to drives by electric motor or turbine. For drives involving hydraulic motors or internal combustion engines, the factor K_1 has to be multiplied by 1.1.

Size Determination

Equation for continuous power:

$$\frac{P_N}{n} \cdot K_1 \leq \frac{P_{KN}}{n} \text{ (kW · min)}$$

P_N = max. continuous power (kW)

n = operating speed (rpm)

K_1 = service factor from Table 1

$\frac{P_{KN}}{n}$ = power rating acc. to dimension table (kW · min)

Equation for continuous torque T_N

$$T_N \cdot K_1 \leq T_{KN}$$

$$T_N = \frac{P_N}{n} \cdot 9550 \text{ (Nm)}$$

$$T_{KN} = \frac{P_{KN}}{n} \cdot 9550 \text{ (Nm)}$$

Permissible additional loads:

max. starting load of coupling $= 1.5 \cdot P_{KN}/n$ for 10^5 LC

max. short-circuit load of coupling $= 3 \cdot P_{KN}/n$ for 10^3 LC

LC = load cycle

If higher angular or parallel misalignments occur during operation, it may be necessary to reduce the max. permissible operating speed. In this case, the speed factors listed in Table 2 have to be used.

The maximum permissible bore diameter is a further criterion in coupling selection. For this reason, the bore capacity has to be checked after having determined the coupling size on basis of the power data. If the bore dimension does not allow to install the shaft, a larger coupling size has to be selected.

Important note

The values listed in the dimension tables for the maximum permissible bore only apply to keyed connections, if the keyway does not exceed the dimensions according to DIN 6885. Please consult RENK AG in case of larger keyways.

The power transmission capability of the shaft-hub connection has to be verified by the purchaser.

For shaft-hub connections with interference fit, please advise the shrinkage allowance or the exact shaft dimensions.

Misalignment

In practice, misalignments mostly occur in combined form. The angular misalignment ΔK_w of the coupling connection results from the parallel misalignment ΔK_r of the shafts.
An additional angular misalignment of the axis 1 (shaft) changes the angle ΔK_w relative to the axis 2 (coupling connection). Misalignments within the blue range do not cause an increase of the value ΔK_w, whereas ΔK_w is increased if misalignments outside this range occur. The total misalignment capacity must not exceed $\Delta K_{w\ perm.}$. The permissible angular misalignment data is contained in the dimension tables relating to the individual coupling types.

Schematic depiction of misalignment

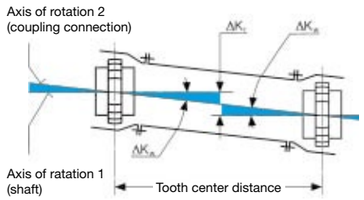

ΔK_r = parallel misalignment
ΔK_w = angular misalignment

1) Applies to angular misalignment continuously occurring during operation. The factor f can be interpolated for values in between.

Table 2, Speed factors

Coupling type		Speed factor f for angular misalignment ΔK_w [1] Values over 0.75° apply to type SB only					
SB Size	**SBk u. LBk** Size	0.25°	0.5°	0.75°	1°	1.25°	1.5°
–	**32**	1	1	1	–	–	–
30	**38**	1	1	0.90	0.68	0.54	0.45
40	**48**	1	1	0.75	0.57	0.45	0.38
50	**60**	1	1	0.70	0.52	0.42	0.35
60	**70**	1	0.93	0.63	0.47	0.37	0.31
70	**80**	1	0.89	0.59	0.44	0.35	0.30
80	**90**	1	0.85	0.57	0.42	0.34	0.28
90	**100**	1	0.80	0.54	0.40	0.32	0.27
100	**110**	1	0.82	0.54	0.41	0.33	0.27
110	**125**	1	0.80	0.53	0.40	0.32	0.27
125	**140**	1	0.78	0.52	0.39	0.31	0.26
140	**160**	1	0.75	0.50	0.37	0.30	0.25
160	**180**	1	0.72	0.48	0.36	0.29	0.24
180	**200**	1	0.68	0.45	0.34	0.27	0.23
200	**225**	1	0.64	0.43	0.32	0.26	0.21
220	**250**	1	0.66	0.44	0.33	0.27	0.22
240	**265**	1	0.66	0.44	0.33	0.27	0.22
260	**280**	1	0.65	0.43	0.33	0.27	0.22
280	**315**	1	0.62	0.43	0.31	0.25	0.21
300	**335**	1	0.63	0.42	0.31	0.25	0.21
320	**355**	1	0.63	0.41	0.31	0.25	0.21
340	**375**	1	0.60	0.40	0.30	0.24	0.20
360	**400**	1	1	0.67	0.51	0.40	0.34
380	**425**	1	1	0.67	0.50	0.40	0.34
400	**450**	1	1	0.67	0.50	0.40	0.33

Subject to change due to technical improvement.

Speed factors
The maximum permissible operating speed n_{perm} depends on the type and size of the coupling and on the misalignment occurring during operation. It is determined by using the following formula:
$n_{perm.} = n_{max.} \cdot f$

$n_{max.}$ acc. to dimension table
speed factor per Table 2.

The angular misalignment ΔK_w continuously occurring during operation is the decisive factor to determine the speed factor. The angular misalignment resulting from the parallel misalignment ΔK_r is obtained by linear calculation from the values listed in the dimension tables.

The following equation applies: $\Delta K_w = \frac{\Delta K_{w\ perm.}}{\Delta K_{r\ max.}} \cdot \Delta K_{r\ act.}$

$\Delta K_{w\ perm.}$ = permissible angular misalignment (deg., decimal value)

$\Delta K_{r\ max.}$ = max. static parallel misalignment (mm)

$\Delta K_{r\ actual}$ = parallel misalignment during operation (mm)

Selection example:

Required: Coupling between electric motor and centrifugal pump

Known: P_N = 380 kW pump power
electric motor size: 400 L
n = 1490 rpm
shaft diameter pump d = 60 mm
shaft diameter motor d = 100 mm
service factor K_1 = 1.25 (centrifugal pump for light liquids)
To allow removal of the stuffing boxes, a larger distance is required between the motor and pump. For this reason, a spacer coupling needs to be used.
The dimension L is to be 280 mm.
Oil lubrication is specified.

Size determination

$$\frac{P_N}{n} \cdot K_1 = \frac{380}{1490} \cdot 1.25 = 0.319$$

According to dimension table 243129, the result is: Coupling SBL 60 with $\frac{P_{KN}}{n} = 0.50$

Check of bore diameter
Bore $d_1;d_{2\ max.} = 70$ mm
The motor shaft, however, requires a bore diameter of 100 mm.

Therefore, the coupling SBL 90 with bore $d_1;d_{2\ max.} = 100$ mm, and a spacer length of L = 280 mm is selected.
The requirement L > 120 mm, acc. to the table on page 40, is hence also fulfilled.
A speed factor does not have to be considered, because higher misalignments do not occur during operation.

Curved Tooth Couplings

Construction Series SB

Dimension Table No. 243 125/1 Page 1

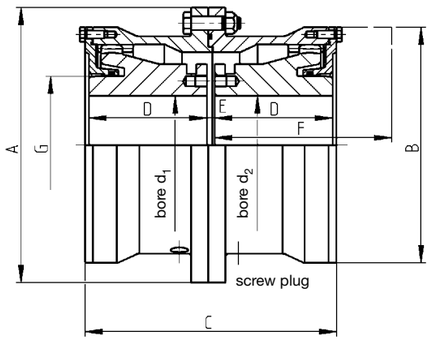

For coupling selection, please see page 6.

The dismounting dimension F is required to allow vertical installation and removal of the machines and O-ring replacement.

Sizes 30 to 200 available from stock.
Other sizes available on request.

For torsional stiffness values, please see the data tables for SB-type couplings.

1) Based on a permissible angular misalignment of $\Delta K_{w\ perm.} = 1.5°$ per coupling half.
Higher misalignment capacity is possible, but requires special measures.

2) Values for the complete coupling with bore d_1; $d_{2\ max.}$

3) The maximum speed capacity depends on the misalignment. Please see table 'Speed Factors'.

Type SB Size	Norm. cont. duty $\frac{P_{KN}}{n}$ kW·min	Speed 3) $n_{max.}$ rpm	Dimensions Bore $d_1;d_2$ pre mm	min mm	max mm	A mm	B mm	C mm	D mm	E mm	F mm	G mm	Max. static 1) radial misalignment $\Delta K_{max.}$ mm	Total grease quantity kg	Total oil quantity litres	Mass 2) moment of inertia J kgm²	Weight 2) kg
30	0.082	7500	10	12	32	118	92	108	50	5	75	45	±1.95	0.09	0.03	0.006	4.4
40	0.146	6900	20	22	46	145	115	128	60	5	90	60	±2.70	0.09	0.04	0.017	7.5
50	0.288	6300	20	22	58	165	135	148	70	5	110	75	±3.00	0.17	0.07	0.033	11.2
60	0.50	5900	26	28	70	200	160	172	80	6	120	90	±3.45	0.25	0.11	0.082	18.4
70	0.82	5400	26	28	78	220	178	192	90	6	130	100	±3.90	0.35	0.15	0.133	26
80	1.14	5000	30	32	92	240	196	212	100	6	150	120	±4.35	0.40	0.20	0.200	32
90	1.64	4700	30	32	100	270	225	236	110	8	170	130	±4.80	0.60	0.30	0.38	47
100	2.30	4300	53	55	110	280	240	256	120	8	180	140	±5.25	0.75	0.35	0.49	54
110	2.88	4000	63	65	120	310	265	276	130	8	190	155	±5.70	1.00	0.45	0.82	72
125	4.60	3700	73	75	138	340	295	320	150	10	215	175	±6.45	1.3	0.65	1.35	100
140	6.48	3400	83	85	156	390	325	350	165	10	230	200	±7.20	1.6	0.85	2.41	142
160	9.24	3100	118	120	180	435	370	404	190	12	270	230	±8.40	2.6	1.4	4.3	199
180	12.92	2900	138	140	200	480	415	456	220	12	300	260	±9.60	3.3	1.8	7.5	285
200	18.4	2700	158	160	225	545	465	512	245	14	340	290	±10.80	4.8	2.5	14.1	420
220	25.6	2400	158	160	250	580	510	556	270	16	360	355	±12.00	5	2.5	19.7	514
240	32.8	2200	178	180	275	645	560	598	290	18	380	390	±12.80	7	3.5	29.9	657
260	41.0	2100	198	200	295	680	595	640	310	20	400	415	±13.50	8	4	42.3	797
280	51.4	2000	218	220	325	745	660	702	340	22	440	460	±14.25	10	6	69	1065
300	64.8	1900	238	240	340	775	675	744	360	24	470	480	±15.00	11	8	84	1220
320	82.0	1800	258	260	375	825	725	786	380	26	500	525	±16.50	13	9	119	1470
340	98.6	1700	278	280	400	915	795	808	390	28	520	560	±16.50	20	11	184	1870
360	118.3	950	297	300	420	960	840	830	400	30	540	590	±16.50	26	12	244	2245
380	138.0	900	317	320	445	1010	890	870	420	30	560	625	±18.00	29	13	345	2610
400	165.1	875	337	340	460	1050	925	890	430	30	580	650	±18.00	32	15	368	2780

Subject to change due to technical improvement.

Curved Tooth Couplings

Construction Series SB

Dimension Table No. 243 125/1 Page 2

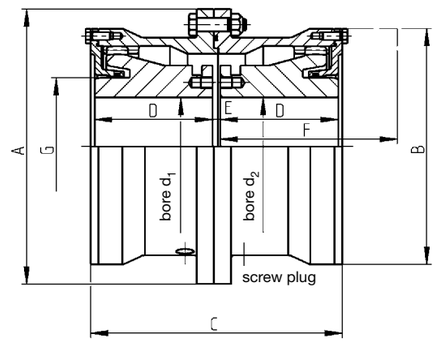

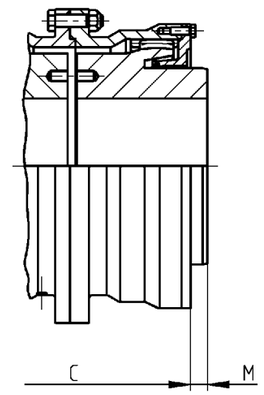

For coupling selection, please see page 6.

The dismounting dimension F is required to allow vertical installation and removal of the machines and O-ring replacement.

Other sizes available on request.

For torsional stiffness values, please see the data tables for SB-type couplings.

1) Based on a permissible angular misalignment of $\Delta K_{w\ perm.} = 1.5°$ per coupling half.

Higher misalignment capacity is possible, but requires special measures.

2) Values for the complete coupling with bore d_1; $d_{2\ max.}$

3) The maximum speed capacity depends on the misalignment. Please see table 'Speed Factors'.

Type SB Size	Norm. cont. duty $\frac{P_{KN}}{n}$ kW·min	Speed 3) $n_{max.}$ rpm	Dimensions bore $d_1;d_2$ pre mm	min mm	max mm	A mm	B mm	C mm	D mm	E mm	F mm	G mm	M mm	Max. static 1) radial misalignment $\Delta K_{max.}$ mm	Total grease quantity kg	Total oil quantity litres	Mass 2) moment of inertia J kgm²	Weight 2) kg
420	184.8	850	357	360	485	1120	970	930	450	30	610	690	–	±18.00	34	16	486	3324
440	220.8	825	377	380	505	1160	990	950	460	30	630	715	–	±18.00	37	18	658	3502
460	247.2	800	397	400	535	1210	1060	958	480	30	650	760	16	±19.50	45	19	768	4058
480	276.0	770	417	420	555	1250	1080	968	500	40	680	790	36	±19.50	47	21	870	4421
500	307.2	750	437	440	600	1310	1170	1005	525	40	710	852	42.5	±19.50	48	23	1071	5088
525	345.6	725	457	460	605	1340	1200	1030	550	40	760	860	55	±19.50	50	26	1276	5487
550	393.6	700	477	480	640	1390	1240	1050	580	40	800	910	75	±19.50	59	29	1649	6284
575	444.0	675	497	500	670	1460	1325	1250	600	50	820	950	95	±19.50	60	32	1920	7325
600	523.2	650	522	525	700	1490	1360	1310	630	50	860	990	125	±19.50	64	35	2120	7740
625	616.8	625	547	550	730	1550	1385	1350	650	50	890	1030	145	±18.00	66	38	2493	8380
650	688.8	600	572	575	755	1660	1510	1410	680	50	920	1070	175	±18.00	68	42	3147	9863
675	775.2	575	597	600	790	1710	1545	1450	700	50	940	1120	195	±18.00	84	46	3696	10546
700	873.6	550	622	625	820	1760	1620	1510	730	50	970	1160	225	±18.00	105	50	5036	12058

Subject to change due to technical improvement.

Curved Tooth Couplings

Construction Series SBk

Dimension Table No. 243 126/1 Page 1

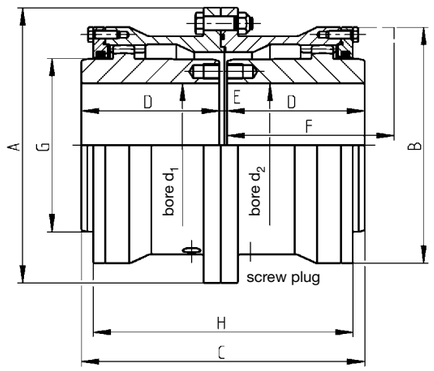

Hub configuration II

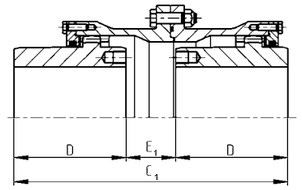

Hub configuration III

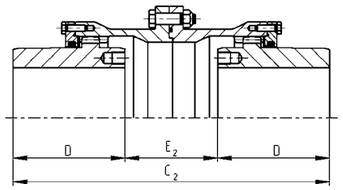

For coupling selection, please see page 6.

The dismounting dimension F is required to allow vertical installation and removal of the machines and O-ring replacement.

Sizes 38 to 225 available from stock.
Other sizes available on request.

For torsional stiffness values, please see the data tables for SBk-type couplings.

1) Based on a permissible angular misalignment of $\Delta K_{w\ perm.} = 0.75°$ per coupling half.

Higher misalignment capacity is possible, but requires special measures.

2) Values for the complete coupling with bore d_1; $d_{2\ max.}$

3) The maximum speed capacity depends on the misalignment. Please see table 'Speed Factors'.

Type SBk Size	Norm. cont. duty $\frac{P_{KN}}{n}$ kW·min	Speed 3) $n_{max.}$ rpm	Dimensions bore $d_1;d_2$ min mm	max mm	A mm	B mm	C mm	C_1 mm	C_2 mm	D mm	E mm	E_1 mm	E_2 mm	F mm	G mm	H mm	Max. static 1) radial misalignment $\Delta K_{max.}$ mm	Total grease quantity kg	Mass 2) moment of inertia J kgm²	Weight 2) kg
38	0.082	7500	12	42	118	92	125	137	149	60	5	17	29	90	60	115	±1.01	0.09	0.007	4.6
48	0.146	6900	22	55	145	115	145	166	187	70	5	26	47	100	77	135	±1.26	0.09	0.018	8.1
60	0.288	6300	22	65	165	135	166	193	220	80	6	33	60	110	90	155	±1.50	0.17	0.036	11.9
70	0.50	5900	28	80	200	160	186	222	258	90	6	42	78	120	112.5	178	±1.73	0.25	0.087	20
80	0.82	5400	28	92	220	178	206	248	290	100	6	48	90	130	128	198	±1.95	0.35	0.146	27
90	1.14	5000	32	105	240	196	228	276	324	110	8	56	104	140	145	218	±2.25	0.40	0.22	33
100	1.64	4700	32	115	270	225	258	309	360	125	8	59	110	150	160.5	244	±2.40	0.60	0.42	50
110	2.30	4300	55	126	280	240	288	342	396	140	8	62	116	170	176	264	±2.70	0.75	0.55	59
125	2.88	4000	65	145	310	265	310	368	426	150	10	68	126	180	200.5	284	±2.85	1.00	0.91	78
140	4.60	3700	75	162	340	295	350	420	490	170	10	80	150	200	224.5	330	±3.30	1.3	1.58	111
160	6.48	3400	85	185	390	325	392	464	536	190	12	84	156	230	256.5	360	±3.60	1.6	2.78	154
180	9.24	3100	120	210	435	370	452	540	628	220	12	100	188	260	288.5	416	±4.20	2.6	4.96	218
200	12.92	2900	140	230	480	415	514	616	718	250	14	116	218	300	320.5	476	±4.80	3.3	8.4	305
225	18.4	2700	160	260	545	465	576	688	800	280	16	128	240	330	362	532	±5.40	4.8	15.6	445
250	25.6	2400	160	280	580	510	620	752	884	300	20	152	284	350	400	556	±6.00	5	21.8	550
265	32.8	2200	180	310	645	560	680	815	948	330	20	154	288	380	440	600	±6.30	7	34.0	735
280	41.0	2100	200	325	680	595	680	854	1028	330	20	194	368	380	460	640	±6.75	8	45.5	850
315	51.4	2000	220	360	745	660	740	926	1112	360	20	206	392	420	510	702	±6.75	10	71	1060
335	64.8	1900	240	380	775	675	780	981	1182	380	20	221	422	440	535	744	±7.50	11	88	1275
355	82.0	1800	260	410	825	725	825	1034	1243	400	25	234	443	460	580	786	±8.25	13	127	1530
375	98.6	1700	280	440	915	795	865	1061	1257	420	25	221	417	480	620	808	±8.25	20	192	1920
400	118.3	950	330	470	960	840	905	1094	1283	440	25	214	403	500	665	830	±8.25	26	242	2200
425	138.0	900	355	500	1010	890	945	1145	1345	460	25	225	425	520	710	870	±9.00	29	330	2640
450	165.1	875	370	520	1050	925	990	1180	1370	480	30	220	410	550	730	890	±9.00	32	389	3035

Subject to change due to technical improvement.

Curved Tooth Couplings

Construction Series SBk

Dimension Table No. 243 126/1 Page 2

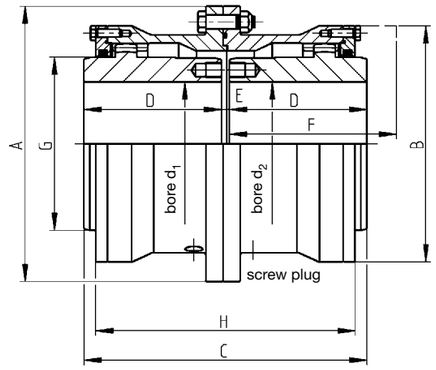

Hub configuration II

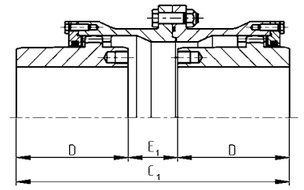

Hub configuration III

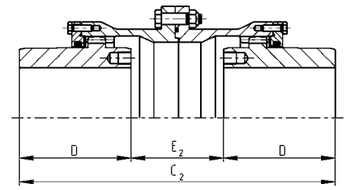

For coupling selection, please see size determination.

The dismounting dimension F is required to allow vertical installation and removal of the machines and O-ring replacement.

Other sizes available on request.

For torsional stiffness values, please see the data tables for SBk-type couplings.

1) Based on a permissible angular misalignment of $\Delta K_{w\ perm} = 0.75°$ per coupling half.

Higher misalignment capacity is possible, but requires special measures.

2) Values for the complete coupling with bore d_1; $d_{2\ max.}$

3) The maximum speed capacity depends on the misalignment. Please see table 'Speed Factors'.

Type SBk Size	Norm. cont. duty $\frac{P_{KN}}{n}$ kW·min	Speed 3) $n_{max.}$ rpm	Dimensions bore $d_1;d_2$ min mm	max mm	A mm	B mm	C mm	C_1 mm	C_2 mm	D mm	E mm	E_1 mm	E_2 mm	F mm	G mm	H mm	Max. static 1) radial misalignment $\Delta K_{max.}$ mm	Total grease quantity kg	Mass 2) moment of inertia J kgm²	Weight 2) kg
475	184.8	850	395	550	1120	970	1030	1215	1400	500	30	215	400	580	770	930	±6	34	529	3435
500	220.8	825	420	570	1160	990	1090	1254	1418	530	30	194	358	610	800	950	±6	37	604	3730
530	247.2	800	450	605	1210	1060	1150	1282	1414	560	30	162	294	640	850	958	±6.5	45	789	4436
560	276.0	770	470	635	1250	1080	1220	1381	1542	590	40	201	362	670	890	1034	±6.5	47	927	4858
600	345.6	725	510	685	1340	1200	1280	1372	1470	620	40	132	230	710	960	1034	±6.5	50	1371	6035
630	393.6	700	540	715	1390	1240	1340	1410	1480	650	40	110	180	750	1005	1050	±6.5	59	1639	6815
670	523.2	650	580	785	1490	1360	1400	1430	1460	680	40	70	100	790	1100	1060	±6.5	64	2364	8290
710	616.8	625	610	815	1550	1385	1470	1470	1470	710	50	50	50	820	1140	1060	±6	66	2749	8883
750	688.8	600	650	870	1660	1510	1550	1550	1550	750	50	50	50	860	1220	1060	±6	68	3798	10832
800	775.2	575	700	905	1710	1545	1650	1650	1650	800	50	50	50	910	1270	1060	±6	84	4223	12094
830	873.6	550	730	950	1760	1620	1710	1710	1710	830	50	50	50	940	1330	1060	±6	105	5403	13484

Subject to change due to technical improvement.

Curved Tooth Couplings

Construction Series LBk

Dimension Table No. 243 126/ 2

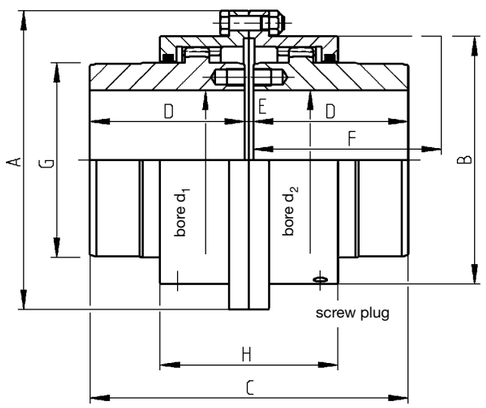

For coupling selection,
please see page 6.

The dismounting dimension F is required to allow vertical installation and removal of the machines and O-ring replacement.

Sizes 32 to 225 available from stock. Other sizes available on request.

For torsional stiffness values, please see the data tables for LBk-type couplings.

1) Based on a permissible angular misalignment of $\Delta K_{w\ perm.} = 0.75°$ per coupling half.

Higher misalignment capability is possible, but requires special measures.

2) Values for the complete coupling with bore d_1; $d_{2\ max.}$

3) The maximum speed capacity depends on the misalignment. Please see table 'Speed Factors'.

Type LBk Size	Norm. cont. duty $\frac{P_{KN}}{n}$ kW·min	Speed 3) $n_{max.}$ rpm	Dimensions bore $d_1;d_2$ min mm	max mm	A mm	B mm	C mm	D mm	E mm	F mm	G mm	H mm	Max. static 1) radial misalignment $\Delta K_{max.}$ mm	Total grease quantity kg	Mass 2) moment of inertia J kgm²	Weight 2) kg
32	0.050	8500	12	35	105	74	104	50	4	80	48	90	±0.57	0.03	0.0034	2.9
38	0.082	7500	12	42	115	88	125	60	5	90	60	101	±0.69	0.04	0.0059	4.3
48	0.146	6900	22	55	145	108	145	70	5	100	77	102	±0.71	0.06	0.015	7.0
60	0.288	6300	22	65	165	125	166	80	6	110	90	107	±0.77	0.10	0.026	9.3
70	0.50	5900	28	80	195	146	186	90	6	120	112.5	112	±0.78	0.15	0.059	14.7
80	0.82	5400	28	92	215	168	206	100	6	130	128	119	±0.84	0.22	0.097	20.0
90	1.14	5000	32	105	230	185	228	110	8	140	145	127	±0.92	0.29	0.14	25.4
100	1.64	4700	32	115	265	210	258	125	8	150	160.5	148	±1.08	0.44	0.28	38.0
110	2.30	4300	55	126	270	224	288	140	8	170	176	161	±1.23	0.55	0.36	45.6
125	2.88	4000	65	145	305	245	310	150	10	180	200.5	175	±1.34	0.79	0.64	62
140	4.60	3700	75	162	330	270	350	170	10	200	224.5	197	±1.44	0.90	1.03	82
160	6.48	3400	85	185	375	305	392	190	12	230	256.5	221	±1.70	1.23	1.5	120
180	9.24	3100	120	210	425	348	452	220	12	260	288.5	250	±1.89	1.9	3.6	177
200	12.92	2900	140	230	470	392	514	250	14	300	320.5	272	±2.12	2.4	6.2	245
225	18.4	2700	160	260	535	437	576	280	16	330	362	315	±2.42	3.7	11.2	347

Subject to change due to technical improvement.

Curved Tooth Couplings

Construction Series SBR

Dimension Table No. 243 127

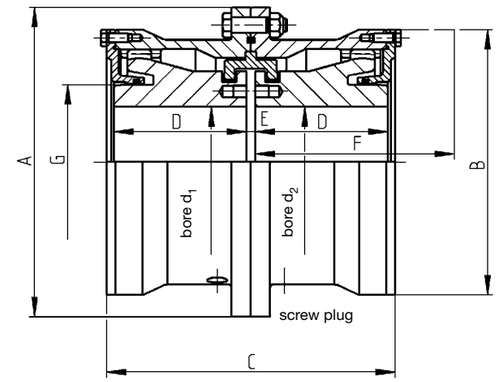

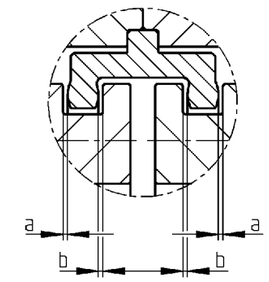

The construction series SBR is equipped with an U-shaped retaining ring for end float limitation. For these types, the permissible angular misalignment depends on the axial clearances a and b.

The maximum static parallel misalignment is to be calculated from the values of the comparable SB-types with the factor 0.4.

Sizes 30 to 200 available from stock. Other sizes available on request.

The dismounting dimension F is required for the vertical installation and removal of the machines as well as for mounting the retaining ring and the O-rings.

For torsional stiffness values, please see the data tables for SB-type couplings.

1) The permissible angular misalignment $\Delta K_{w\ perm.}$ is 0.6° per coupling half, based on the values stated in the list. The axial clearances a and b can be varied if the operation conditions require so.

2) Values for the complete coupling with bore d_1; $d_{2\ max.}$

3) The maximum speed capacity depends on the misalignment. Please see table 'Speed Factors'.

For coupling selection,
please see page 6.

Typ SBR Size	Norm. cont. duty $\frac{P_{KN}}{n}$ kW·min	Speed 3) $n_{max.}$ rpm	Dimensions bore $d_1;d_2$ pre mm	min mm	max mm	A mm	B mm	C mm	D mm	E mm	F mm	G mm	Axial clearances 1) a and b mm	Total grease quantity kg	Total oil quantity litres	Mass 2) moment of inertia J kgm²	Weight 2) kg
30	0.082	7500	10	12	32	118	92	110	50	5	75	45	0.5	0.08	0.08	0.006	4.7
40	0.146	6900	20	22	46	145	115	131	60	5	90	60	0.5	0.16	0.16	0.017	7.8
50	0.288	6300	20	22	58	165	135	151	70	5	110	75	0.5	0.26	0.26	0.035	12.0
60	0.50	5900	26	28	70	200	160	175	80	6	120	90	0.5	0.43	0.43	0.085	19.4
70	0.82	5400	26	28	78	220	178	197	90	6	130	100	0.5	0.57	0.57	0.14	27.3
80	1.14	5000	30	32	92	240	196	217	100	6	150	120	0.5	0.74	0.74	0.21	33
90	1.64	4700	30	32	100	270	225	241	110	8	170	130	0.5	1.2	1.2	0.40	50
100	2.30	4300	53	55	110	280	240	261	120	8	180	140	1.0	1.4	1.4	0.52	57
110	2.88	4000	63	65	120	310	265	282	130	8	190	155	1.0	1.8	1.8	0.83	74
125	4.60	3700	73	75	138	340	295	325	150	10	215	175	1.0	2.4	2.4	1.41	105
140	6.48	3400	83	85	156	390	325	355	165	10	230	200	1.0	3.1	3.1	2.45	148
160	9.24	3100	118	120	180	435	370	410	190	12	270	230	1.0	4.5	4.5	4.51	209
180	12.92	2900	138	140	200	480	415	462	220	12	300	260	1.0	7.0	7.0	7.8	297
200	18.4	2700	158	160	225	545	465	519	245	14	340	290	1.0	10.7	10.7	14.6	428
220	25.6	2400	158	160	250	580	510	556	270	16	360	355	1.5	11.5	11.5	21.7	540
240	32.8	2200	178	180	275	645	560	598	290	18	380	390	1.5	12.5	12.5	32.5	682
260	41.0	2100	198	200	295	680	595	640	310	20	400	415	1.5	14	14	44.3	832
280	51.4	2000	218	220	325	745	660	702	340	22	440	460	1.5	17	17	73	1130
300	64.8	1900	238	240	340	775	675	744	360	24	470	480	1.5	20	20	88	1275
320	82.0	1800	258	260	375	825	725	786	380	26	500	525	1.5	24	24	124	1535
340	98.6	1700	278	280	400	915	795	808	390	28	520	560	1.5	28	28	185	1900

Subject to change due to technical improvement.

Curved Tooth Couplings

Construction Series SBRk

Dimension Table No. 243 128/ 1

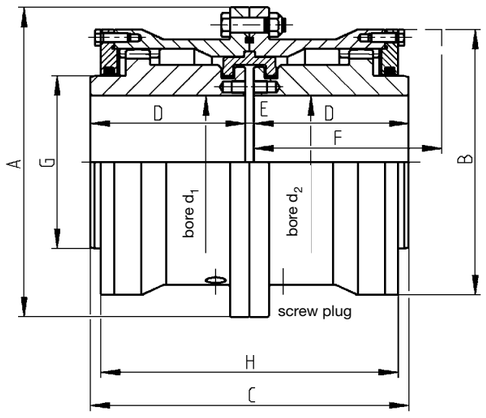

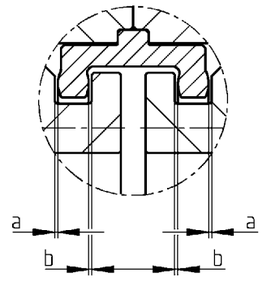

The construction series SBRk is equipped with a U-shaped retaining ring for end float limitation. For these types, the permissible angular misalignment depends on the axial clearances a and b.

For coupling selection,
please see page 6.

The dismounting dimension F is required for the vertical installation and removal of the machines as well as for mounting the retaining ring and the O-rings.

Other sizes available on request.

The maximum static parallel misalignment is to be calculated from the values of the comparable SBk-types with the factor 0.8.

For torsional stiffness values, please see the data tables for SB-type couplings.

1) The permissible angular misalignment $\Delta K_{w\ perm.}$ is 0.6° per coupling half, based on the values stated in the list. The axial clearances a and b can be varied if the operation conditions require so.

2) Values for the complete coupling with bore d_1;$d_{2\ max.}$

3) The maximum speed capacity depends on the misalignment. Please see table 'Speed Factors'.

Type SBRk	Norm. cont. duty	Speed 3)	Dimensions										Axial clearances 1) a and b	Total grease quantity	Mass 2) moment of inertia J	Weight 2)
			bore d_1;d_2													
Size	$\frac{P_{KN}}{n}$	$n_{max.}$	min	max	A	B	C	D	E	F	G	H				
	kW·min	rpm	mm	mm	mm	mm	mm	mm	mm	mm	mm	mm	mm	kg	kgm²	kg
38	0.082	7500	12	40	118	92	125	60	5	90	52	117	0.5	0.07	0.008	5.1
48	0.146	6900	22	50	145	115	145	70	5	100	71	138	0.5	0.14	0.022	9.0
60	0.288	6300	22	63	165	135	166	80	6	110	83	158	0.5	0.21	0.041	12.8
70	0.50	5900	28	75	200	160	186	90	6	120	103	181	0.5	0.28	0.10	22
80	0.82	5400	28	85	220	178	206	100	6	130	116	203	0.5	0.44	0.16	29
90	1.14	5000	32	95	240	196	228	110	8	140	133	223	0.5	0.60	0.25	37
100	1.64	4700	32	105	270	225	258	125	8	150	142	249	0.5	0.90	0.49	55
110	2.30	4300	55	115	280	240	288	140	8	170	156	269	1.0	1.0	0.65	65
125	2.88	4000	65	130	310	265	310	150	10	180	177	290	1.0	1.1	1.10	86
140	4.60	3700	75	150	340	295	350	170	10	200	200	335	1.0	1.4	1.83	119
160	6.48	3400	85	170	390	325	392	190	12	230	230	365	1.0	1.7	3.12	167
180	9.24	3100	120	190	435	370	452	220	12	260	261	422	1.0	2.8	5.75	243
200	12.92	2900	140	210	480	415	514	250	14	300	296	482	1.0	4.6	9.6	337
225	18.4	2700	160	240	545	465	576	280	16	330	338	539	1.0	7.1	17.8	475

Subject to change due to technical improvement.

Curved Tooth Couplings

Construction Series LBRkn

Dimension Table No. 243 351

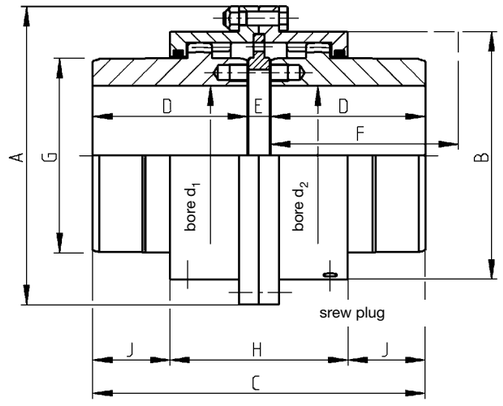

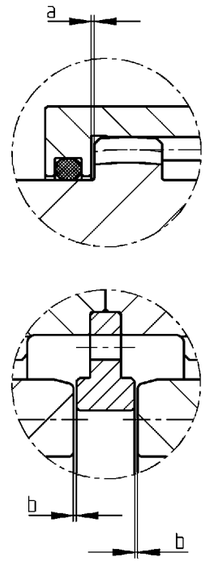

The construction series LBRkn is equipped with a retaining plate for end float limitation. For these types, the permissible angular misalignment depends on the axial clearances a and b.

For coupling selection,
please see page 6.

The dismounting dimension F is required to allow vertical installation and removal of the machines and O-ring replacement.

Other sizes available on request.

For torsional stiffness values, please see the data tables for LBk-type couplings.

The maximum static parallel misalignment is to be calculated from the values of the comparable LBk-types with the factor 0.8.

1) The permissible angular misalignment $\Delta K_{w\ perm.}$ is 0.6° per coupling half, based on the values stated in the list.

The axial clearances a and b can be varied if the operation conditions require so.

2) Values for the complete coupling with bore d_1;$d_{2\ max.}$

3) The maximum speed capacity depends on the misalignment. Please see table 'Speed Factors'.

Type LBRkn	Norm. cont. duty	Speed 3)	Dimensions											Axial clearances 1) a and b	Total grease quantity	Mass 2) moment of inertia J	Weight 2)
			bore d_1;d_2														
Size	$\frac{P_{KN}}{n}$	$n_{max.}$	min	max	A	B	C	D	E	F	G	H	J				
	kW·min	rpm	mm	mm	mm	mm	mm	mm	mm	mm	mm	mm	mm	mm	kg	kgm²	kg
32	0.050	8500	12	35	105	74	113	50	13	80	48	90	11.5	0.5	0.03	0.004	3.1
38	0.082	7500	12	42	115	88	134	60	14	90	60	101	16.5	0.5	0.04	0.006	4.5
48	0.146	6900	22	55	145	108	154	70	14	100	77	102	26.0	0.5	0.06	0.016	7.3
60	0.288	6300	22	65	165	125	177	80	17	110	90	107	35.0	0.5	0.10	0.027	9.8
70	0.50	5900	28	80	195	146	197	90	17	120	112	112	42.5	0.5	0.15	0.062	15.4
80	0.82	5400	28	92	215	168	218	100	18	130	128	119	49.5	0.5	0.22	0.102	21.0
90	1.14	5000	32	105	230	185	240	110	20	140	145	127	56.5	0.5	0.29	0.15	26.5
100	1.64	4700	32	115	265	210	271	125	21	150	160	148	61.5	0.5	0.44	0.29	39.8
110	2.30	4300	55	126	270	224	301	140	21	170	176	161	70.0	1.0	0.55	0.38	47.5
125	2.88	4000	65	145	305	245	325	150	25	180	200	175	75.0	1.0	0.79	0.66	64.4
140	4.60	3700	75	162	330	270	367	170	27	200	224	197	85.0	1.0	0.90	1.07	85.0
160	6.48	3400	85	185	375	305	409	190	29	230	256	221	94.0	1.0	1.23	1.57	124.0
180	9.24	3100	120	210	425	348	474	220	34	260	288	250	112.0	1.0	1.90	3.72	183.0
200	12.92	2900	140	230	470	392	536	250	36	300	320	272	132.0	1.0	2.40	6.39	252.0
225	18.4	2700	160	260	535	437	599	280	39	330	362	315	142.0	1.0	3.70	11.5	357.0

Subject to change due to technical improvement.

Curved Tooth Couplings

Construction Series SBL

Dimension Table No. 243 129

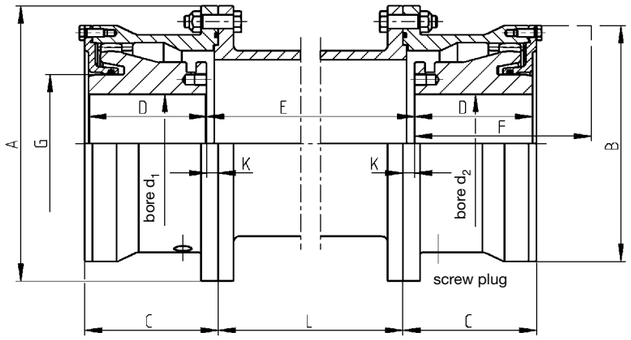

The dismounting dimension F is required to allow vertical installation and removal of the machines.

Torsional stiffness values, mass moments of inertia for couplings with spacer, and weight details are contained in the data table for SB-type couplings.

Sizes 30 to 200 are available from stock, without spacer.
Other sizes available on request.

The maximum permissible static parallel misalignment depends on the permissible angular misalignment and on the length of the spacer. The permissible angular misalignment for SB-type couplings is $\Delta K_{w\ perm.} = 1.5°$ per coupling half.

Higher misalignment capacity is possible, but requires special measures.

1) The speed n_{max} depends on the length and weight of the spacer.

The maximum speed capacity is determined by the misalignment. Please see the table 'Speed Factors'.

2) Values for the complete coupling without spacer, with bore $d_1, d_{2max.}$

For coupling selection, please see page 6.

Type SBL	Norm. cont. duty	Speed 1)	Dimensions											Total grease 2) quantity	Total oil 2) quantity	Mass 2) moment of inertia J	Weight 2)
			bore $d_1;d_2$														
Size	$\frac{P_{KN}}{n}$	$n_{max.}$	pre	min	max	A	B	C	D	F	G	K	L				
	kW·min	min^{-1}	mm	mm	mm	mm	mm	mm	mm	mm	mm	mm	mm	kg	litres	kgm^2	kg
30	0.082	7500	10	12	32	118	92	55	50	75	45	3.5	E- 7	0.10	0.04	0.007	4.5
40	0.146	6900	20	22	46	145	115	68.5	60	90	60	7.0	E-14	0.11	0.06	0.018	8.0
50	0.288	6300	20	22	58	165	135	78.5	70	110	75	7.0	E-14	0.19	0.10	0.035	11.8
60	0.50	5900	26	28	70	200	160	91.5	80	120	90	8.5	E-17	0.27	0.14	0.085	19.2
70	0.82	5400	26	28	78	220	178	102	90	130	100	9	E-18	0.38	0.18	0.138	26.4
80	1.14	5000	30	32	92	240	196	112	100	150	120	9	E-18	0.43	0.23	0.21	32.5
90	1.64	4700	30	32	100	270	225	126	110	170	130	12	E-24	0.66	0.35	0.40	50
100	2.30	4300	53	55	110	280	240	136	120	180	140	12	E-24	0.81	0.41	0.51	57
110	2.88	4000	63	65	120	310	265	146	130	190	155	12	E-24	1.2	0.57	0.85	75
125	4.60	3700	73	75	138	340	295	170	150	215	175	15	E-30	1.5	0.74	1.65	104
140	6.48	3400	83	85	156	390	325	185	165	230	200	15	E-30	1.8	0.98	2.45	147
160	9.24	3100	118	120	180	435	370	213	190	270	230	17	E-34	2.8	1.6	4.51	208
180	12.92	2900	138	140	200	480	415	239	220	300	260	17	E-34	3.5	2.1	7.8	295
200	18.4	2700	158	160	225	545	465	269	245	340	290	20	E-40	5.1	2.8	14.1	422
220	25.6	2400	158	160	250	580	510	294	270	360	355	24	E-48	5.2	2.8	20.4	532
240	32.8	2200	178	180	275	645	560	316	290	380	390	26	E-52	7.3	3.5	31.9	687
260	41.0	2100	198	200	295	680	595	338	310	400	415	28	E-56	8.3	4.0	43.7	832
280	51.4	2000	218	220	325	745	660	370	340	440	460	30	E-60	10.5	6.0	71	1110
300	64.8	1900	238	240	340	775	675	390	360	470	480	30	E-60	11.5	8.0	85.8	1255
320	82.0	1800	258	260	375	825	725	410	380	500	525	30	E-60	13.5	9.0	121	1515
340	98.6	1700	278	280	400	915	795	430	390	520	560	40	E-80	21	11.0	188	1930
360	118.3	950	297	300	420	960	840	442	400	540	590	42	E-84	27	12	253	2280
380	138.0	900	317	320	445	1010	890	462	420	560	625	42	E-84	30	13	355	2660
400	165.1	875	337	340	460	1050	925	472	430	580	650	42	E-84	33	15	382	2830

Subject to change due to technical improvement.

Curved Tooth Couplings

Construction Series SBLk

Dimension Table No. 243 130/ 1

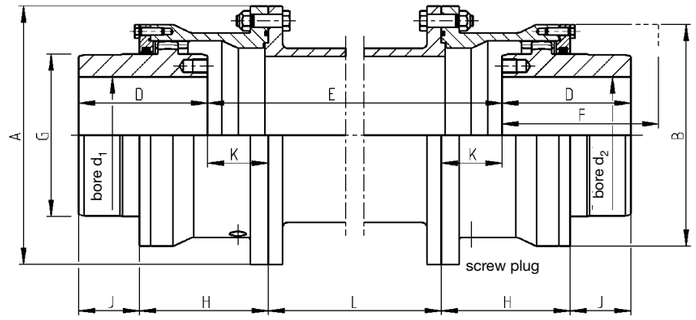

For coupling selection, please see page 6.

Torsional stiffness values and mass moments of inertia for couplings with spacer are contained in the data table for SBk-type couplings.

The dismounting dimension F is required to allow vertical installation and removal of the machines and O-ring replacement.

Sizes 38 to 225 are available from stock, without spacer.
Other sizes available on request.

The maximum permissible static parallel misalignment depends on the permissible angular misalignment and on the length of the spacer. The permissible angular misalignment for SBLk-type couplings is $\Delta K_{w\ perm.} = 0.75°$ per coupling half.

Higher misalignment capacity is possible, but requires special measures.

Note: The constructional design of the SBLk series allows different hub configurations in the sleeve.

Please see Hub Configuration for SBk-type couplings.

1) The speed n_{max} depends on the length and weight of the spacer.

The maximum speed capacity is determined by the misalignment. Please see the table 'Speed Factors'.

2) Values for the complete coupling without spacer, with bore $d_1, d_{2max.}$

Type SBLk	Norm. cont. duty	Speed 1)	Dimensions												Total grease 2) quantity	Mass 2) moment of inertia J	Weight 2)
			bore $d_1;d_2$														
Size	$\frac{P_{KN}}{n}$	$n_{max.}$	min	max	A	B	D	F	G	H	J	K	L				
	kW·min	rpm	mm	mm	mm	mm	mm	mm	mm	mm	mm	mm	mm		kg	kgm^2	kg
38	0.082	7500	12	42	118	92	60	90	60	58.5	17	15.5	E- 31		0.09	0.01	4.7
48	0.146	6900	22	55	145	115	70	100	77	72.0	26	28	E- 56		0.09	0.02	8.6
60	0.288	6300	22	65	165	135	80	110	90	82.0	32.5	34.5	E- 69		0.17	0.04	12.6
70	0.50	5900	28	80	200	160	90	120	112.5	94.5	40	44.5	E- 89		0.25	0.09	21
80	0.82	5400	28	92	220	178	100	130	128.5	105	46	51	E-102		0.35	0.15	28
90	1.14	5000	32	105	240	196	110	140	145	115	53	58	E-116		0.40	0.23	35
100	1.64	4700	32	115	270	225	125	150	160.5	130	58	63	E-126		0.60	0.44	52
110	2.30	4300	55	126	280	240	140	170	176.0	140	66	66	E-132		0.75	0.57	62
125	2.88	4000	65	145	310	265	150	180	200.5	150	71	71	E-142		1.0	0.94	82
140	4.60	3700	75	162	340	295	170	200	224.5	175	80	85	E-170		1.3	1.86	115
160	6.48	3400	85	185	390	325	190	230	256.5	190	88	88	E-176		1.6	2.84	160
180	9.24	3100	120	210	435	370	220	260	288.5	219	106	105	E-210		2.6	5.18	228
200	12.92	2900	140	230	480	415	250	300	320.5	249	121	120	E-240		3.3	8.77	316
225	18.4	2700	160	260	545	465	280	330	362	279	134	133	E-266		4.8	15.6	449
250	25.6	2400	160	280	580	510	300	350	400	282	164	146	E-292		5	22.3	564
265	32.8	2200	180	310	645	560	330	380	440	304	174	148	E-296		7	34.2	757
280	41.0	2100	200	325	680	595	330	380	460	324	194	188	E-376		8	46.5	873
315	51.4	2000	220	360	745	660	360	420	510	356	205	201	E-402		10	73	1090
335	64.8	1900	240	380	775	675	380	440	535	377	219	216	E-432		11	114	1315
355	82.0	1800	260	410	825	725	400	460	580	398	228.5	226.5	E-453		13	129	1571
375	98.6	1700	280	440	915	795	420	480	620	410	224.5	214.5	E-429		20	195	1970
400	118.3	950	330	470	960	840	440	500	665	421	226.5	207.5	E-415		26	247	2259
425	138.0	900	355	500	1010	890	460	520	710	441	237.5	218.5	E-437		29	337	2600
450	165.1	875	370	520	1050	925	480	550	730	451	240.0	211.0	E-422		32	396	3087

Subject to change due to technical improvement.

Curved Tooth Couplings

Construction Series LBLk

Dimension Table No. 243 130/ 2

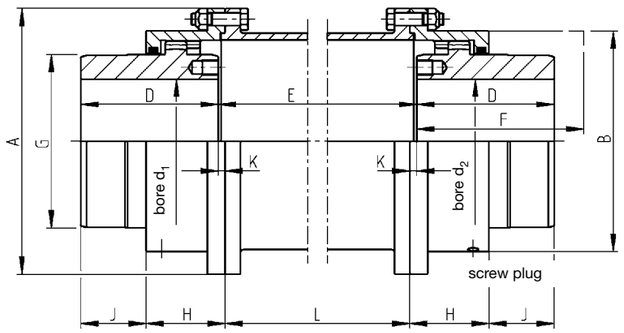

For coupling selection,
please see page 6.

Torsional stiffness values, mass moments of inertia for couplings with spacer and weight details are contained in the data table for LBk-type couplings.

Sizes 32 to 225 are available from stock, without spacer.
Other sizes available on request.

The dismounting dimension F is required to allow vertical installation and removal of the machines and O-ring replacement.

The maximum permissible static parallel misalignment depends on the permissible angular misalignment and on the length of the spacer. The permissible angular misalignment for LBLk coupling types is $\Delta K_{w\ perm.} = 0.75°$ per coupling half.

Higher misalignment capacity is possible, but requires special measures.

1) The speed n_{max} depends on the length and weight of the spacer.

The maximum speed capacity is determined by the misalignment.
Please see table 'Speed Factors'.

2) Values for the complete coupling without spacer, with bore d_1,$d_{2max.}$

Type LBLk Size	Norm. cont. duty P_{KN}/n kW·min	Speed 1) $n_{max.}$ rpm	Dimensions bore d_1;d_2 min mm	max mm	A mm	B mm	D mm	F mm	G mm	H mm	J mm	K mm	L mm	Total grease 2) quantity kg	Mass 2) moment of inertia J kgm²	Weight 2) kg
32	0.050	8500	12	35	105	74	50	80	48	45.0	9.5	4.5	E- 9	0.03	0.0034	2.9
38	0.082	7500	12	42	115	88	60	90	60	50.5	14.5	5.0	E-10	0.04	0.0059	4.3
48	0.146	6900	22	55	145	108	70	100	77	51.0	24.0	5.0	E-10	0.06	0.015	7.0
60	0.288	6300	22	65	165	125	80	110	90	53.5	32.0	5.5	E-11	0.10	0.026	9.3
70	0.50	5900	28	80	195	146	90	120	112.5	56.0	40.0	6	E-12	0.15	0.059	14.7
80	0.82	5400	28	92	215	168	100	130	128.5	59.5	46.5	6	E-12	0.22	0.097	20.0
90	1.14	5000	32	105	230	185	110	140	145	63.5	53.5	7	E-14	0.29	0.14	25.4
100	1.64	4700	32	115	265	210	125	150	160.5	74.0	58.0	7	E-14	0.44	0.28	38.0
110	2.30	4300	55	126	270	224	140	170	176.0	80.5	66.5	7	E-14	0.55	0.36	45.6
125	2.88	4000	65	145	305	245	150	180	200.5	87.5	70.5	8	E-16	0.79	0.64	62
140	4.60	3700	75	162	330	270	170	200	224.5	98.5	80.5	9	E-18	0.90	1.03	82
160	6.48	3400	85	185	375	305	190	230	256.5	110.5	89.5	10	E-20	1.23	1.5	93
180	9.24	3100	120	210	425	348	220	260	288.5	125.0	107.0	12	E-24	1.90	3.6	177
200	12.92	2900	140	230	470	392	250	300	320.5	136.0	126.0	12	E-24	2.40	6.2	245
225	18.4	2700	160	260	535	437	280	330	362.0	157.5	136.5	14	E-28	3.70	11.2	347

Subject to change due to technical improvement.

Curved Tooth Couplings

Construction Series SRL

Dimension Table No. 243 131

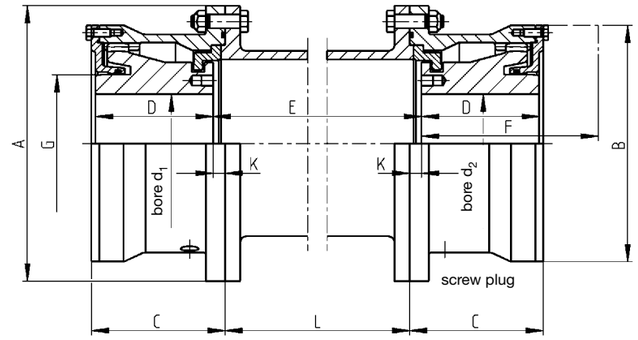

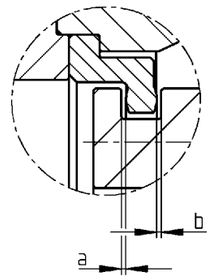

The construction series SRL is equipped with two Z-shaped retaining rings for end float limitation. For these types, the permissible angular misalignment depends on the axial clearances a and b.

Torsional stiffness values, mass moments of inertia for couplings with spacer, and weight details are contained in the data table for SB-type couplings.

Sizes 30 to 200 are available from stock, without spacer.
Other sizes available on request.

The dismounting dimension F is required for the vertical installation and removal of the machines and for mounting the retaining rings and O-rings.

1) The speed n_{max} depends on the length and weight of the spacer.

The maximum speed capacity is determined by the misalignment.
Please see table 'Speed Factors'.

2) The permissible angular misalignment $\Delta K_{w\ perm.}$ is 0.6° per coupling half, based on the values stated in the list.

The axial clearances a and b can be varied if the operation conditions require so.

3) Values for the complete coupling without spacer, with bore d_1;$d_{2\ max.}$

For coupling selection,
please see page 6.

Type SRL Size	Norm. cont. duty P_{KN}/n kW·min	Speed 1) $n_{max.}$ rpm	Dimensions bore d_1;d_2 pre mm	min mm	max mm	A mm	B mm	C mm	D mm	F mm	G mm	K mm	L mm	Axial clearances 2) a and b mm	Total grease 3) quantity kg	Total oil 3) quantity litres	Mass 3) moment of inertia J kgm²	Weight 3) kg
30	0.082	7500	10	12	32	118	92	55	50	75	45	3.5	E- 7	0.5	0.09	0.09	0.01	4.7
40	0.146	6900	20	22	46	145	115	68.5	60	90	60	7	E-14	0.5	0.17	0.17	0.02	8.3
50	0.288	6300	20	22	58	165	135	78.5	70	110	75	7	E-14	0.5	0.27	0.27	0.04	12.4
60	0.50	5900	26	28	70	200	160	91.5	80	120	90	9	E-18	0.5	0.45	0.45	0.09	20.0
70	0.82	5400	26	28	78	220	178	102	90	130	100	9	E-18	0.5	0.59	0.59	0.14	27.7
80	1.14	5000	30	32	92	240	196	112	100	150	120	9	E-18	0.5	0.77	0.77	0.22	34
90	1.64	4700	30	32	100	270	225	126	110	170	130	12	E-24	0.5	1.3	1.3	0.42	53
100	2.30	4300	53	55	110	280	240	136	120	180	140	12	E-24	1.0	1.5	1.5	0.54	60
110	2.88	4000	63	65	120	310	265	146	130	190	155	12	E-24	1.0	1.9	1.9	0.88	79
125	4.60	3700	73	75	138	340	295	170	150	215	175	15	E-30	1.0	2.5	2.5	1.70	108
140	6.48	3400	83	85	156	390	325	185	165	230	200	15	E-30	1.0	3.2	3.2	2.55	153
160	9.24	3100	118	120	180	435	370	213	190	270	230	17	E-34	1.0	4.7	4.7	4.71	217
180	12.92	2900	138	140	200	480	415	239	220	300	260	17	E-34	1.0	7.2	7.2	8.1	306
200	18.4	2700	158	160	225	545	465	269	245	340	290	20	E-40	1.0	11.0	11.0	14.5	443
220	25.6	2400	158	160	250	580	510	294	270	360	355	24	E-48	1.5	11.8	11.8	21.4	559
240	32.8	2200	178	180	275	645	560	316	290	380	390	26	E-52	1.5	12.8	12.8	33.5	722
260	41.0	2100	198	200	295	680	595	338	310	400	415	28	E-56	1.5	14.4	14.4	45.7	872
280	51.4	2000	218	220	325	745	660	370	340	440	460	30	E-60	1.5	17.5	17.5	75	1170
300	64.8	1900	238	240	340	775	675	390	360	470	480	30	E-60	1.5	21.5	21.5	91.4	1335
320	82.0	1800	258	260	375	825	725	410	380	500	525	30	E-60	1.5	22	22	128	1610
340	98.6	1700	278	280	400	915	795	430	390	520	560	40	E-80	1.5	29	29	198	2040

Subject to change due to technical improvement.

Curved Tooth Couplings

Construction Series SRLk

Dimension Table No. 243 132/ 1

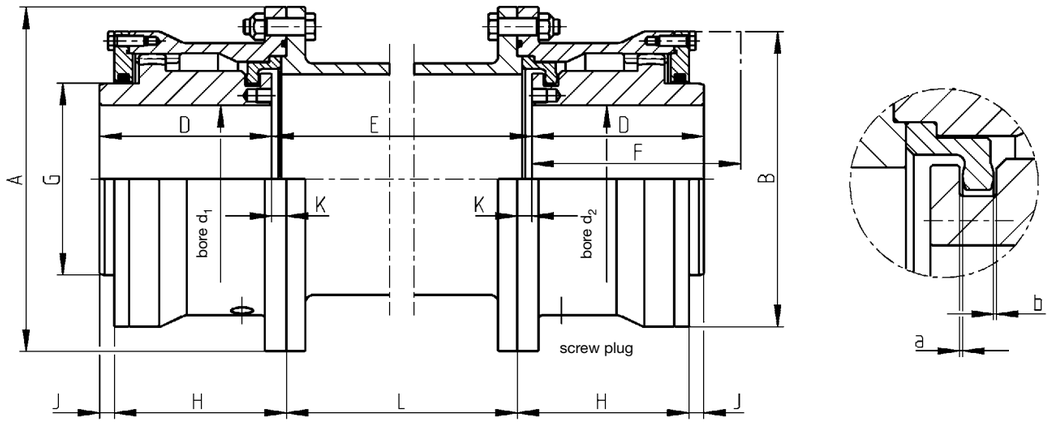

The construction series SRLk is equipped with two Z-shaped retaining rings for end float limitation. For these types, the permissible angular misalignment depends on the axial clearances a and b.

For coupling selection,
please see page 6.

Torsional stiffness values, mass moments of inertia for couplings with spacer, and weight details are contained in the data table for SBk-type couplings.

The dismounting dimension F is required for the vertical installation and removal of the machines and for mounting the retaining rings and O-rings.

1) The speed n_{max} depends on the length and weight of the spacer.

The maximum speed capacity is determined by the misalignment. Please see the table 'Speed Factors'.

2) The permissible angular misalignment $\Delta K_{w\ perm.}$ is 0.6° per coupling half, based on the values stated in the list.

The axial clearances a and b can be varied if the operation conditions require so.

3) Values for the complete coupling without spacer, with bore $d_1;d_{2\ max.}$

Spacer length
L = E - 2 x K
Other sizes available on request.

Type SRLk	Norm. cont. duty	Speed 1)	Dimensions													
			bore $d_1;d_2$										Axial clearances 2) a and b	Total grease 3) quantity	Mass 3) moment of inertia J	Weight 3)
Size	$\frac{P_{KN}}{n}$	$n_{max.}$	min	max	A	B	D	F	G	H	J	K				
	kW·min	rpm	mm	mm	mm	mm	mm	mm	mm	mm	mm	mm	mm	kg	kgm²	kg
38	0.082	7500	12	40	118	92	60	90	52	58.5	5	3.5	0.5	0.08	0.01	5.3
48	0.146	6900	22	50	145	115	70	100	71	72.0	5	7.0	0.5	0.15	0.02	10
60	0.288	6300	22	63	165	135	80	110	83	82.0	5	7.0	0.5	0.22	0.05	15
70	0.50	5900	28	75	200	160	90	120	103	94.5	4	8.5	0.5	0.30	0.10	24
80	0.82	5400	28	85	220	178	100	130	116	105	4	9	0.5	0.46	0.16	31
90	1.14	5000	32	95	240	196	110	140	133	115	4	9	0.5	0.63	0.25	42
100	1.64	4700	32	105	270	225	125	150	142	130	7	12	0.5	1.0	0.50	60
110	2.30	4300	55	115	280	240	140	170	156	140	12	12	1.0	1.1	0.64	72
125	2.88	4000	65	130	310	265	150	180	177	150	12	12	1.0	1.2	1.00	96
140	4.60	3700	75	150	340	295	170	200	200	175	10	15	1.0	1.5	1.93	136
160	6.48	3400	85	170	390	325	190	230	230	190	15	15	1.0	1.8	3.14	182
180	9.24	3100	120	190	435	370	220	260	261	219	18	17	1.0	3.0	5.75	268
200	12.92	2900	140	210	480	415	250	300	296	249	18	17	1.0	4.8	9.85	365
225	18.4	2700	160	240	545	465	280	330	338	279	21	20	1.0	7.4	18.40	553

Subject to change due to technical improvement.

Curved Tooth Couplings

Construction Series LRLkn

Dimension Table No. 243 352

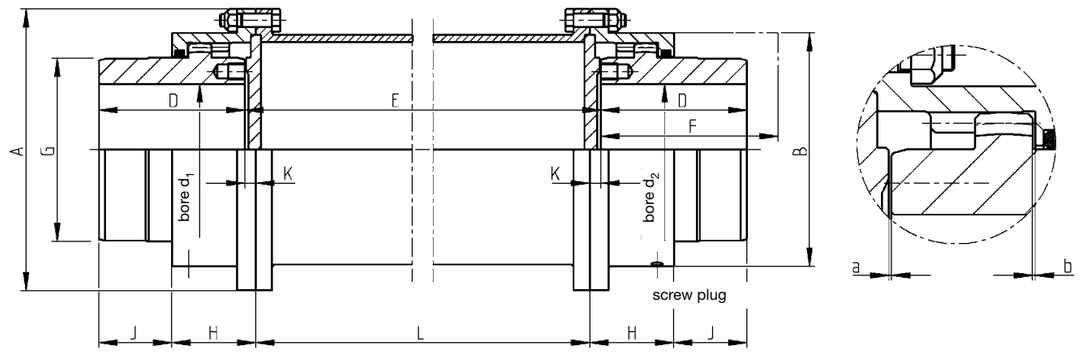

The construction series LRLkn is equipped with two crowned retaining plates for end float limitation. For these types, the permissible angular misalignment depends on the axial clearances a and b.

For coupling selection,
please see page 6.

Torsional stiffness values, mass moments of inertia for couplings with spacer, and weight details are contained in the data table for LBk-type couplings.

The dismounting dimension F is required for replacing the O-rings.

1) The speed n_{max} depends on the length and weight of the spacer.

The maximum speed capacity is determined by the misalignment.
Please see table 'Speed Factors'.

2) The permissible angular misalignment $\Delta K_{w\ perm.}$ is 0.6° per coupling half, based on the values stated in the list.

The axial clearances a and b can be varied if the operation conditions require so.

3) Values for the complete coupling without spacer, with bore $d_1;d_{2\ max.}$

Spacer length
L = E - 2 x K
Other sizes available on request.

Type LRLkn	Norm. cont. duty	Speed 1)	Dimensions													
			bore $d_1;d_2$										Axial clearances 2) a and b	Total grease 3) quantity	Mass 3) moment of inertia J	Weight 3)
Size	$\frac{P_{KN}}{n}$	$n_{max.}$	min	max	A	B	D	F	G	H	J	K				
	kW·min	rpm	mm	mm	mm	mm	mm	mm	mm	mm	mm	mm	mm	kg	kgm²	kg
32	0.050	8500	12	35	105	74	50	80	48	45.0	11.5	6.5	0.5	0.03	0.004	3.3
38	0.082	7500	12	42	115	88	60	90	60	50.5	16.5	7	0.5	0.04	0.006	4.8
48	0.146	6900	22	55	145	108	70	100	77	51.0	26.0	7	0.5	0.06	0.02	7.9
60	0.288	6300	22	65	165	125	80	110	90	53.5	35.0	8.5	0.5	0.10	0.03	10.7
70	0.50	5900	28	80	195	146	90	120	112	56.0	42.5	8.5	0.5	0.15	0.07	17.2
80	0.82	5400	28	92	215	168	100	130	128	59.5	49.5	9	0.5	0.22	0.11	23.2
90	1.14	5000	32	105	230	185	110	140	145	63.5	56.5	10	0.5	0.29	0.16	29.5
100	1.64	4700	32	115	265	210	125	150	160	74.0	61.5	10.5	0.5	0.44	0.31	44
110	2.30	4300	55	126	270	224	140	170	176	80.5	70.0	10.5	1.0	0.55	0.40	53
125	2.88	4000	65	145	305	245	150	180	200	87.5	75.0	12.5	1.0	0.79	0.69	72
140	4.60	3700	75	162	330	270	170	200	224	98.5	85.0	14	1.0	0.90	1.13	95
160	6.48	3400	85	185	375	305	190	230	256	110.5	94.0	15	1.0	1.23	1.68	110
180	9.24	3100	120	210	425	348	220	260	288	125.0	112.0	17	1.0	1.90	3.93	201
200	12.92	2900	140	230	470	392	250	300	320	136.0	132.0	18	1.0	2.40	6.70	278
225	18.4	2700	160	260	535	437	280	330	362	157.5	142.0	19.5	1.0	3.70	12.2	392

Subject to change due to technical improvement.

Curved Tooth Couplings

Construction Series SBG

Dimension Table No. 243 133

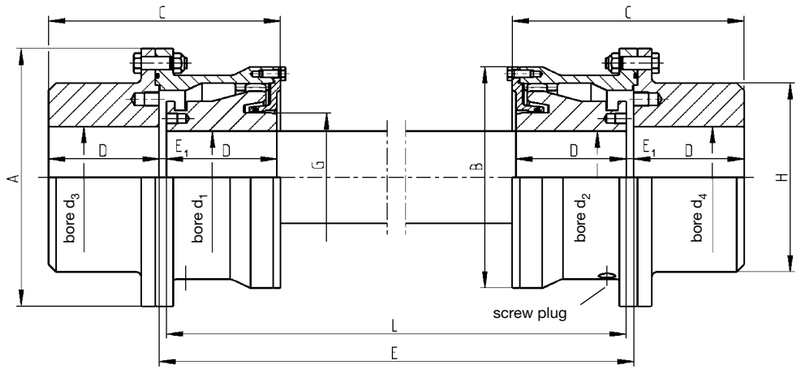

For coupling selection, please see page 6.

Torsional stiffness values for couplings with intermediate shaft are contained in the data table for SB-type couplings.

Sizes 30 to 200 are available from stock, without intermediate shaft. Other sizes available on request.

The maximum permissible static parallel misalignment depends on the permissible angular misalignment and on the length of the intermediate shaft. The permissible angular misalignment for SBG coupling types is $\Delta K_{w\ perm.}$ = 1.5° per coupling half.

Higher misalignment capacity is possible, but requires special measures.

1) The speed n_{max} depends on the length and weight of the intermediate shaft.

The maximum speed capacity is determined by the misalignment. Please see the table 'Speed Factors'.

2) Values for the complete coupling without intermediate shaft, with bores d_1,$d_{2\ max}$ and d_3; $d_{4\ max.}$

Type SBG	Norm. cont. duty	Speed 1)	Dimensions																
			bore																
			d_1;d_2			d_3;d_4													
Size	$\frac{P_{KN}}{n}$	$n_{max.}$	pre	min	max	pre	min	max	A	B	C	D	E_1	G	H	Total grease quantity	Total oil quantity	Mass2) moment of inertia J	Weight 2)
	kW·min	rpm	mm	mm	mm	mm	mm	mm	mm	mm	mm	mm	mm	mm	mm	kg	litres	kgm²	kg
30	0.082	7500	10	12	32	10	12	55	118	92	105	50	3.5	45	80	0.09	0.04	0.01	7.7
40	0.146	6900	20	22	46	20	22	65	145	115	126.5	60	5	60	95	0.10	0.06	0.03	12.6
50	0.288	6300	20	22	58	20	22	75	165	135	146.5	70	5	75	112	0.18	0.09	0.06	19
60	0.50	5900	26	28	70	26	28	90	200	160	169	80	6	90	130	0.26	0.13	0.14	31
70	0.82	5400	26	28	78	26	28	100	220	178	189	90	6	100	150	0.36	0.16	0.23	45
80	1.14	5000	30	32	92	30	32	115	240	196	209	100	6	120	170	0.41	0.21	0.36	56
90	1.64	4700	30	32	100	30	32	130	270	225	232	110	8	130	190	0.62	0.32	0.67	83
100	2.30	4300	53	55	110	53	55	140	280	240	252	120	8	140	205	0.77	0.37	0.88	97
110	2.88	4000	63	65	120	63	65	155	310	265	272	130	8	155	225	1.1	0.53	1.45	129
125	4.60	3700	73	75	138	73	75	170	340	295	315	150	10	175	250	1.4	0.68	2.40	180
140	6.48	3400	83	85	156	83	85	195	390	325	345	165	10	200	285	1.7	0.9	4.34	252
160	9.24	3100	118	120	180	108	110	225	435	370	398	190	12	230	325	2.7	1.5	8.1	365
180	12.92	2900	138	140	200	132	134	250	480	415	454	220	12	260	360	3.4	1.9	13.8	508
200	18.4	2700	158	160	225	148	150	280	545	465	508	245	14	290	410	4.9	2.6	25.3	742
220	25.6	2400	158	160	250	158	160	320	580	510	556	270	16	355	450	5.2	2.8	36.9	934
240	32.8	2200	178	180	275	178	180	340	645	560	598	290	18	390	480	7.3	3.5	54.5	1175
260	41.0	2100	198	200	295	198	200	370	680	595	640	310	20	415	520	8.3	4	77	1450
280	51.4	2000	218	220	325	218	220	390	745	660	700	340	20	460	550	10.5	6	120	1885
300	64.8	1900	238	240	340	238	240	410	775	675	740	360	20	480	580	11.5	8	150	2170
320	82.0	1800	258	260	375	258	260	440	825	725	780	380	20	525	620	13.5	9	208	2620
340	98.6	1700	278	280	400	278	280	460	915	795	808	390	28	560	650	21	11	316	3310
360	118.3	950	297	300	420	297	300	485	960	840	830	400	30	590	680	27	12	410	3880
380	138.0	900	317	320	445	317	320	510	1010	890	870	420	30	625	720	30	13	558	4495
400	165.1	875	337	340	460	337	340	535	1050	925	890	430	30	650	750	33	15	662	4880

Subject to change due to technical improvement.

Curved Tooth Couplings

Construction Series SBGk

Dimension Table No. 243 134/ 1

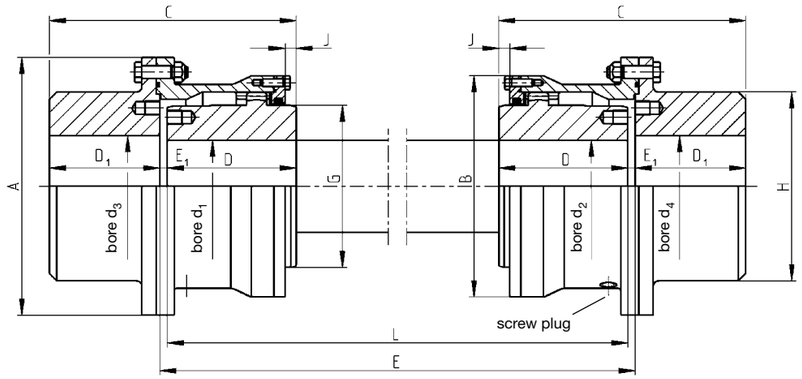

For coupling selection, please see page 6.

Torsional stiffness values for couplings with intermediate shaft and weight details are contained in the data table for SBk-type couplings.

Sizes 38 to 225 are available from stock, without intermediate shaft. Other sizes available on request.

The maximum permissible static parallel misalignment depends on the permissible angular misalignment and on the length of the intermediate shaft. The permissible angular misalignment for SBGk coupling types is $\Delta K_{w\ perm.}$ = 0.75° per coupling half.

Higher misalignment capacity is possible, but requires special measures.

1) The speed n_{max} depends on the length and weight of the intermediate shaft.

The maximum speed capacity is determined by the misalignment. Please see the table 'Speed Factors'.

2) Values for the complete coupling without intermediate shaft, with bores d_1, $d_{2\ max}$ and d_3; $d_{4\ max.}$

Type SBGk	Norm. cont. duty	Speed 1)	Dimensions															
			bore															
			d_1-d_4	d_1;d_2	d_3;d_4													
Size	$\frac{P_{KN}}{n}$	$n_{max.}$	min	max	max	A	B	C	D	D_1	E_1	G	H	J	Total grease quantity	Mass 2) moment of inertia J	Weight 2)
	kW·min	rpm	mm	mm	mm	mm	mm	mm	mm	mm	mm	mm	mm	mm	kg	kgm²	kg
38	0.082	7500	12	42	55	118	92	113.5	60	50	3.5	60	80	5	0.09	0.01	8.3
48	0.146	6900	22	55	65	145	115	135	70	60	5	77	95	5	0.09	0.03	13.5
60	0.288	6300	22	65	75	165	135	155	80	70	5	90	112	5	0.17	0.06	20
70	0.50	5900	28	80	90	200	160	176	90	80	6	112.5	130	4	0.25	0.14	33
80	0.82	5400	28	92	100	220	178	196	100	90	6	128	150	4	0.35	0.24	46
90	1.14	5000	32	105	115	240	196	216	110	100	6	145	170	4	0.40	0.38	58
100	1.64	4700	32	115	130	270	225	243	125	110	8	160.5	190	7	0.60	0.68	86
110	2.30	4300	55	126	140	280	240	268	140	120	8	176	205	12	0.75	0.95	102
125	2.88	4000	65	145	155	310	265	288	150	130	8	200.5	225	12	1.0	1.54	135
140	4.60	3700	75	162	170	340	295	330	170	150	10	224.5	250	10	1.3	2.86	189
160	6.48	3400	85	185	195	390	325	365	190	165	10	256.5	285	15	1.6	4.60	255
180	9.24	3100	120	210	225	435	370	422	220	190	12	288.5	325	18	2.6	8.54	380
200	12.92	2900	140	230	250	480	415	482	250	220	12	320.5	360	18	3.3	15.1	526
225	18.4	2700	160	260	280	545	465	539	280	245	14	362	410	21	4.8	26.7	763
250	25.6	2400	160	280	320	580	510	738	300	300	138	400	450	164	5	40	995
265	32.8	2200	180	310	340	645	560	800	330	330	140	440	520	174	7	57	1244
280	41.0	2100	200	325	370	680	595	840	330	330	180	460	520	194	8	77	1408
315	51.4	2000	220	360	390	745	660	911	360	360	191	510	550	205	10	122	1846
335	64.8	1900	240	380	410	775	675	966	380	380	206	535	580	219	11	155	2214
355	82.0	1800	260	410	440	825	725	1016.5	400	400	216.5	580	620	228.5	13	209	2612
375	98.6	1700	280	440	460	915	795	1042.5	420	420	202.5	620	650	224.5	20	320	3565
400	118.3	950	330	470	485	960	840	1075.5	440	440	195.5	665	680	226.5	26	411	3904
425	138.0	900	355	500	510	1010	890	1126.5	460	460	206.5	710	720	237.5	29	545	4554
450	165.1	875	370	520	535	1050	925	1159	480	480	199	730	750	240	32	659	5240

Subject to change due to technical improvement.

Curved Tooth Couplings

Construction Series LBGk

Dimension Table No. 243 134/ 2

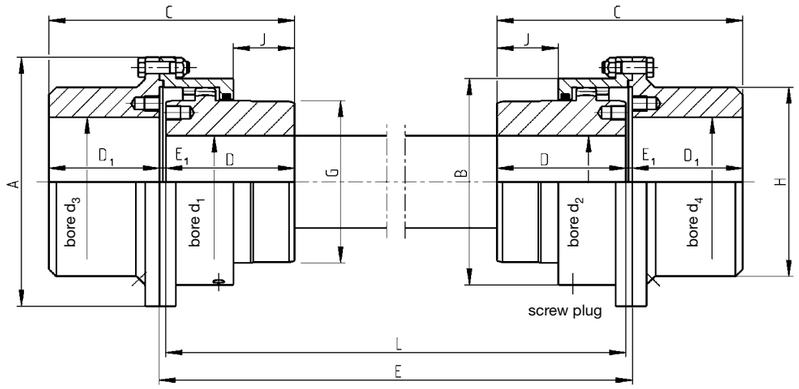

For coupling selection, please see page 6.

Torsional stiffness values for couplings with intermediate shaft and weight details are contained in the data table for LBk-type couplings.

Sizes 32 to 225 are available from stock, without intermediate shaft. Other sizes available on request.

The maximum permissible static parallel misalignment depends on the permissible angular misalignment and on the length of the intermediate shaft. The permissible angular misalignment for LBGk coupling types is $\Delta K_{w\ perm.} = 0.75°$ per coupling half.

Higher misalignment capacity is possible, but requires special measures.

1) The speed n_{max} depends on the length and weight of the intermediate shaft.

The maximum speed capacity is determined by the misalignment. Please see table 'Speed Factors'.

2) Values for the complete coupling without intermediate shaft, with bores d_1, $d_{2\ max}$ and d_3; $d_{4max.}$

Type LBGk Size	Norm. cont. duty P_{KN}/n kW·min	Speed 1) $n_{max.}$ rpm	Dimensions bore d_1-d_4 min mm	d_1;d_2 max mm	d_3;d_4 max mm	A mm	B mm	C mm	D mm	D_1 mm	E_1 mm	G mm	H mm	J mm	Total grease quantity kg	Mass 2) moment of inertia J kgm²	Weight 2) kg
32	0.050	8500	12	35	42	105	74	94.5	50	40	4.5	48	65	9.5	0.03	0.01	5.2
38	0.082	7500	12	42	55	115	88	115	60	50	5.0	60	80	14.5	0.04	0.01	7.4
48	0.146	6900	22	55	65	145	108	135	70	60	5.0	77	95	24.0	0.06	0.03	12.4
60	0.288	6300	22	65	75	165	125	155.5	80	70	5.5	90	112	32.0	0.10	0.05	17.5
70	0.50	5900	28	80	90	195	146	176	90	80	6	112.5	130	40.0	0.15	0.11	27
80	0.82	5400	28	92	100	215	168	196	100	90	6	128	150	46.5	0.22	0.19	38
90	1.14	5000	32	105	115	230	185	217	110	100	7	145	170	53.5	0.29	0.28	49
100	1.64	4700	32	115	130	265	210	242	125	110	7	160.5	190	58.0	0.44	0.54	71
110	2.30	4300	55	126	140	270	224	267	140	120	7	176	205	66.5	0.55	0.70	85
125	2.88	4000	65	145	155	305	245	288	150	130	8	200.5	225	70.5	0.79	1.22	115
140	4.60	3700	75	162	170	330	270	329	170	150	9	224.5	250	80.5	0.90	2.0	156
160	6.48	3400	85	185	195	375	305	365	190	165	10	256.5	285	89.5	1.23	3.3	197
180	9.24	3100	120	210	225	425	348	422	220	190	12	288.5	325	107.0	1.90	7.0	330
200	12.92	2900	140	230	250	470	392	482	250	220	12	320.5	360	126.0	2.40	11.9	457
225	18.4	2700	160	260	280	535	437	539	280	245	14	362	410	136.5	3.70	22.2	665

Subject to change due to technical improvement.

Curved Tooth Couplings

Construction Series SRG

Dimension Table No. 243 135

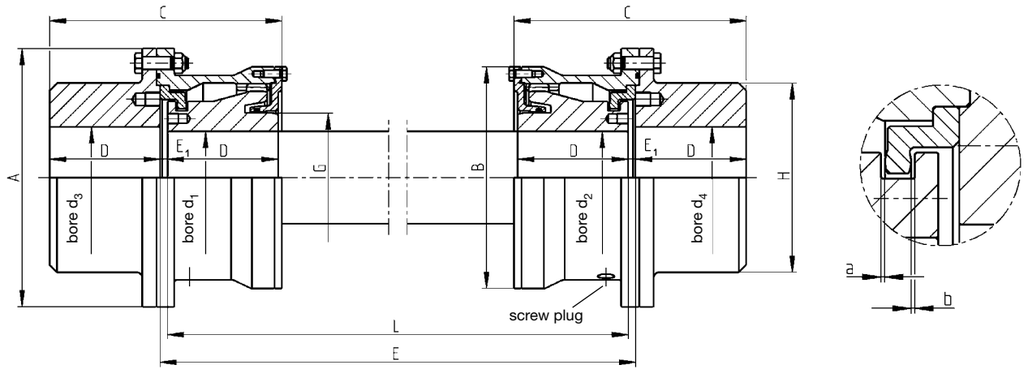

The construction series SRG is equipped with two Z-shaped retaining rings for end float limitation. For these types, the permissible angular misalignment depends on the axial clearances a and b.

For coupling selection, please see page 6.

Sizes 30 to 200 available from stock, without intermediate shaft. Other sizes available on request.

Torsional stiffness values for couplings with intermediate shaft are contained in the data table for SB-type couplings.

1) The speed n_{max} depends on the length and weight of the intermediate shaft.

The maximum speed capacity is determined by the misalignment. Please see table 'Speed Factors'.

2) The permissible angular misalignment $\Delta K_{w\ perm.}$ is 0.6° per coupling half, based on the values stated in the list.

The axial clearances a and b can be varied if the operation conditions require so.

3) Values for the complete coupling without intermediate shaft, with bores d_1; $d_{2\ max.}$ and d_3; $d_{4max.}$

Type SRG Size	Norm. cont. duty P_{KN}/n kW·min	Speed 1) $n_{max.}$ rpm	Dimensions bore d_1;d_2 pre mm	min mm	max mm	d_3;d_4 pre mm	min mm	max mm	A mm	B mm	C mm	D mm	E_1 mm	G mm	H mm	Axial clearances 2) a and b kg	Total grease or oil quantity kg/litres	Mass 3) moment of inertia J kgm²	Weight 3) kg
30	0.082	7500	10	12	32	10	12	55	118	92	105	50	3.5	45	80	0.5	0.09	0.012	8.0
40	0.146	6900	20	22	46	20	22	65	145	115	126.5	60	5	60	95	0.5	0.17	0.030	13.0
50	0.288	6300	20	22	58	20	22	75	165	135	146.5	70	5	75	112	0.5	0.27	0.062	19.8
60	0.50	5900	26	28	70	26	28	90	200	160	169	80	6	90	130	0.5	0.45	0.143	32
70	0.82	5400	26	28	78	26	28	100	220	178	189	90	6	100	150	0.5	0.59	0.235	46
80	1.14	5000	30	32	92	30	32	115	240	196	209	100	6	120	170	0.5	0.77	0.38	58
90	1.64	4700	30	32	100	30	32	130	270	225	232	110	8	130	190	0.5	1.3	0.69	86
100	2.30	4300	53	55	110	53	55	140	280	240	252	120	8	140	205	1.0	1.5	0.90	99
110	2.88	4000	63	65	120	63	65	155	310	265	272	130	8	155	225	1.0	1.9	1.49	133
125	4.60	3700	73	75	138	73	75	170	340	295	315	150	10	175	250	1.0	2.5	2.70	187
140	6.48	3400	83	85	156	83	85	195	390	325	345	165	10	200	285	1.0	3.2	4.42	259
160	9.24	3100	118	120	180	108	110	225	435	370	398	190	12	230	325	1.0	4.7	8.2	374
180	12.92	2900	138	140	200	132	134	250	480	415	454	220	12	260	360	1.0	7.2	14.1	521
200	18.4	2700	158	160	225	148	150	280	545	465	508	245	14	290	410	1.0	11.0	25.6	765
220	25.6	2400	158	160	250	158	160	320	580	510	556	270	16	355	450	1.5	11.8	37.9	964
240	32.8	2200	178	180	275	178	180	340	645	560	598	290	18	390	480	1.5	12.8	57.3	1210
260	41.0	2100	198	200	295	198	200	370	680	595	640	310	20	415	520	1.5	14.4	79.3	1485
280	51.4	2000	218	220	325	218	220	390	745	660	700	340	20	460	550	1.5	17.5	124	1950
300	64.8	1900	238	240	340	238	240	410	775	675	740	360	20	480	580	1.5	21.5	155	2255
320	82.0	1800	258	260	375	258	260	440	825	725	780	380	20	525	620	1.5	22	216	2710
340	98.6	1700	278	280	400	278	280	460	915	795	808	390	28	560	650	1.5	29	326	3420

Subject to change due to technical improvement.

Curved Tooth Couplings

Construction Series SRGk

Dimension Table No. 243 136/ 1

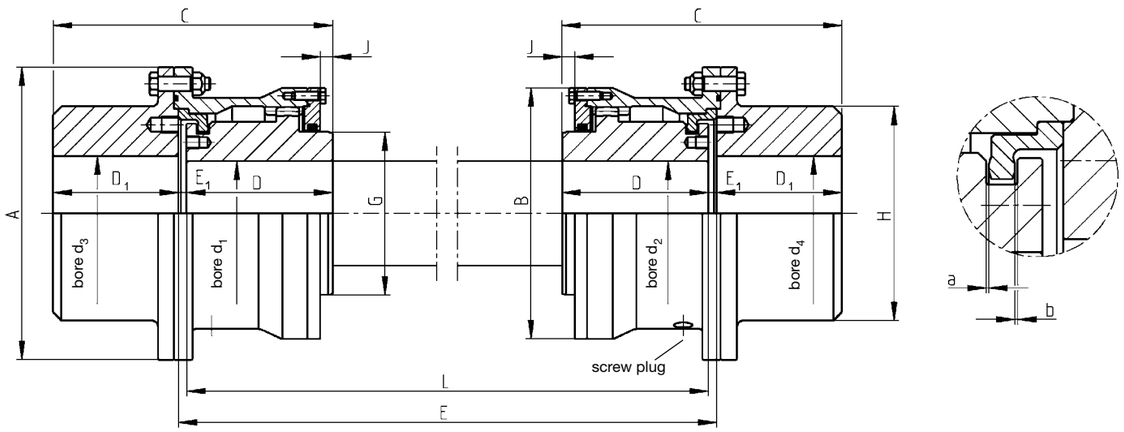

The construction series SRGk is equipped with two Z-shaped retaining rings for end float limitation.

For these types, the permissible angular misalignment depends on the axial clearances a and b.

For coupling selection,
please see page 6.

Torsional stiffness values for couplings with intermediate shaft are contained in the data table for SBk-type couplings.

1) The speed n_{max} depends on the length and weight of the intermediate shaft.

The maximum speed capacity is determined by the misalignment.
Please see table 'Speed Factors'.

2) The permissible angular misalignment $\Delta K_{w\ perm.}$ is 0.6° per coupling half, based on the values stated in the list.

The axial clearances a and b can be varied if the operation conditions require so.

3) Values for the complete coupling without intermediate shaft, with bores d_1; $d_{2\ max.}$ and d_3; $d_{4\ max.}$

Other sizes available on request.

Type SRGk	Norm. cont. duty	Speed 1)	Dimensions													Axial clearances 2) a and b	Total grease quantity	Mass 3) moment of inertia J	Weight 3)
			bore																
Size	$\frac{P_{KN}}{n}$	$n_{max.}$	d_1-d_4 min	d_1;d_2 max	d_3;d_4 max	A	B	C	D	D_1	E_1	G	H	J					
	kW·min	rpm	mm	mm	mm	mm	mm	mm	mm	mm	mm	mm	mm	mm		mm	kg	kgm^2	kg
38	0.082	7500	12	40	55	118	92	113.5	60	50	3.5	52	80	5		0.5	0.08	0.013	8.5
48	0.146	6900	22	50	65	145	115	135	70	60	5	71	95	5		0.5	0.15	0.031	14.1
60	0.288	6300	22	63	75	165	135	155	80	70	5	83	112	5		0.5	0.22	0.062	20.5
70	0.50	5900	28	75	90	200	160	176	90	80	6	103	130	4		0.5	0.30	0.15	33.5
80	0.82	5400	28	85	100	220	178	196	100	90	6	116	150	4		0.5	0.46	0.25	48
90	1.14	5000	32	95	115	240	196	216	110	100	6	133	170	4		0.5	0.63	0.40	60
100	1.64	4700	32	105	130	270	225	243	125	110	8	142	190	7		0.5	1.0	0.72	90
110	2.30	4300	55	115	140	280	240	268	140	120	8	156	205	12		1.0	1.1	1.0	106
125	2.88	4000	65	130	155	310	265	288	150	130	8	177	225	12		1.0	1.2	1.6	142
140	4.60	3700	75	150	170	340	295	330	170	150	10	200	250	10		1.0	1.5	2.95	195
160	6.48	3400	85	170	195	390	325	365	190	165	10	230	285	15		1.0	1.8	4.7	264
180	9.24	3100	120	190	225	435	370	422	220	190	12	261	325	18		1.0	3.0	9.0	400
200	12.92	2900	140	210	250	480	415	482	250	220	12	296	360	18		1.0	4.8	15.6	552
225	18.4	2700	160	240	280	545	465	539	280	245	14	338	410	21		1.0	7.4	28.2	790

Subject to change due to technical improvement.

Curved Tooth Couplings

Construction Series SBD

Dimension Table No. 243 137

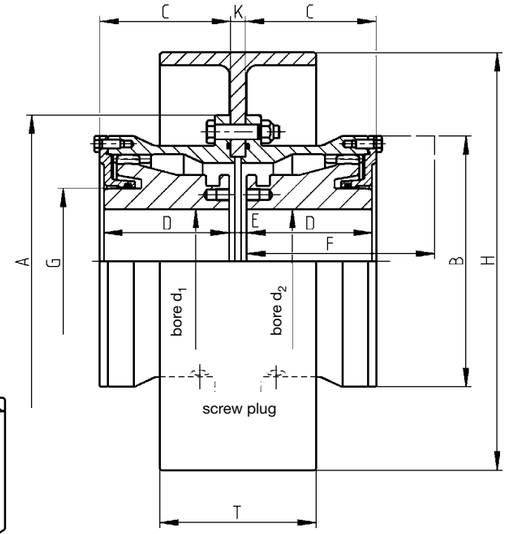

Fig. 2

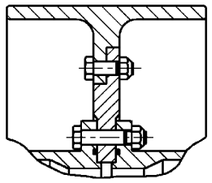

Split brake disks allow the vertical installation and removal of the machines.

Torsional stiffness values are contained in the data table for SB-type couplings.

The dismounting dimension F is required for the vertical installation and removal of the machines and for the replacement of the O-rings.

1) The speed n_{max} depends on the circumferential speed of the brake disk. The specifications of the brake supplier have to be observed!

2) Based on a permissible angular misalignment of $\Delta K_{w\ perm.}$ = 1.5° per coupling half.

These values only apply to the couplings, not to the brake.

Recommended brake disk allocation			
Coupling size	Brake disk ØH		
	mm	mm	mm
30	200	250	
40	200	250	315
50	200	250	315
60	250	315	400
70	250	315	400
80	315	400	
90	315	400	500
100	315	400	500
110	400	500	630
125	400	500	630
140	500	630	710
160	500	630	710
180	630	710	
200	630	710	

Brake disk dimensions			Mass 4) moment of inertia	Weight 4)
ØH	T	K		
mm	mm	mm	kgm^2	kg
200	75	8	0.033	4.22
250	95	9	0.09	7.25
315	118	11	0.28	13.5
400	150	14	0.90	28
500	190	18	2.35	45
630	236	22	7.50	94
710	265	22	12.5	123

3) Values of the complete coupling, without brake disk, with d_1; $d_{2\ max.}$

4) Weights and mass moments of inertia are based on the largest coupling size allocated.

For coupling selection,
please see page 6.

Other sizes available on request.

Type SBD	Norm. cont. duty	Speed 1)	Dimensions										Max. static radial mialign-ment $\Delta K_{max.}$ 2)	Total grease quantity	Total oil quantity	Mass 3) moment of inertia J	Weight 3)
			bore														
Size	$\frac{P_{KN}}{n}$	$n_{max.}$	pre d_1;d_2	min	max	A	B	C	D	E	F	G					
	kW·min	rpm	mm	mm	mm	mm	mm	mm	mm	mm	mm	mm	mm	kg	litres	kgm^2	kg
30	0.082	7500	10	12	32	118	92	53	50	K+3	75	45	±1.95	0.085	0.027	0.007	4.4
40	0.146	6900	20	22	46	145	115	62.5	60	K+2	90	60	±2.70	0.09	0.043	0.016	7.4
50	0.288	6300	20	22	58	165	135	72.5	70	K+2	110	75	±3.00	0.17	0.070	0.029	11.1
60	0.50	5900	26	28	70	200	160	84.5	80	K+3	120	90	±3.45	0.25	0.11	0.075	18.3
70	0.82	5400	26	28	78	220	178	93.5	90	K+1	130	100	±3.90	0.35	0.15	0.13	25.4
80	1.14	5000	30	32	92	240	196	103.5	100	K+1	150	120	±4.35	0.40	0.20	0.19	31.4
90	1.64	4700	30	32	100	270	225	115.5	110	K+3	170	130	±4.80	0.60	0.30	0.37	46
100	2.30	4300	53	55	110	280	240	125.5	120	K+3	180	140	±5.25	0.75	0.35	0.47	54
110	2.88	4000	63	65	120	310	265	135.0	130	K+2	190	155	±5.70	1.0	0.45	0.81	72
125	4.60	3700	73	75	138	340	295	157.5	150	K+5	215	175	±6.45	1.3	0.65	1.31	100
140	6.48	3400	83	85	156	390	325	172.5	165	K+5	230	200	±7.20	1.6	0.85	2.35	140
160	9.24	3100	118	120	180	435	370	199.0	190	K+6	270	230	±8.40	2.6	1.4	4.2	198
180	12.92	2900	138	140	200	480	415	225.0	220	K+6	300	260	±9.60	3.3	1.8	7.4	283
200	18.4	2700	158	160	225	545	465	252.5	245	K+7	340	290	±10.80	4.8	2.5	14	417

Subject to change due to technical improvement.

Curved Tooth Couplings

Construction Series SBT

Dimension Table No. 243 138

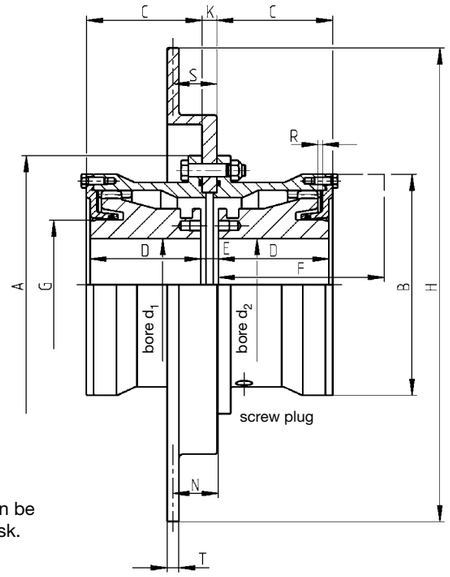

Fig. 2

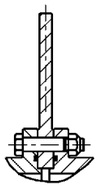

As an option, the couplings can be supplied with straight brake disk.

Recommended brake disk allocation				
Coupling size	Brake disk ØH (nominal dimension) mm	mm	mm	mm
30	300			
40	300			
50	350			
60	400	460	515	
70	400	460	515	
80	460	515	610	
90	460	515	610	710
100	515	610	710	
110	515	610	710	810
125	610	710	810	
140	610	710	810	915
160	710	810	915	
180	710	810	915	
200	810	915		

Brake disk dimensions ØH mm	T mm	K mm	S mm	Mass 4) moment of inertia kgm²	Weight 4) kg
300	12.7	8	34.65	0.099	6.7
356	12.7	10	47.65	0.19	10
406	12.7	13	47.65	0.30	12
457	12.7	16	47.65	0.48	16
514	12.7	16	47.65	0.57	20
610	12.7	16	47.65	1.5	26
711	12.7	18	47.65	2.9	39
812	12.7	23	47.65	5.8	61
915	12.7	23	47.65	10.0	92

The dismounting dimension F is required to allow the vertical installation and removal of the machines and O-ring replacement.

1) The speed n_{max} depends on the permissible circumferential speed of the brake disk. The specifications of the brake supplier have to be observed!

2) Based on a permissible angular misalignment of $\Delta K_{w\ perm.} = 1.5°$ per coupling half.
These values only apply to the couplings, not to the brake.

3) Values for the complete coupling, without brake disk, with bore d_1; $d_{2\ max.}$

4) Weights and mass moments of inertia are based on the largest coupling size allocated.

5) The axial clearances have to be checked in relation to the brake calipers.

Torsional stiffness values are contained in the data table for SB-type couplings.

For coupling selection,
please see page 6.

Other sizes available on request.

Type SBT Size	Norm. cont. duty P_{KN}/n kW·min	Speed 1) $n_{max.}$ rpm	Dimensions bore $d_1;d_2$ pre mm	min mm	max mm	A mm	B mm	C mm	D mm	E mm	F mm	G mm	N mm	R5) mm	Max. static radial misalign- mm	Total grease quantity kg	Total oil quantity litres	Mass 3) moment of inertia J kgm²	Weight 3) kg
30	0.082	7500	10	12	32	118	92	53	50	K+ 3	75	45	36.15	2	±1.95	0.09	0.03	0.007	4.4
40	0.146	6900	20	22	46	145	115	62.5	60	K+ 3	90	60	36.15	2	±2.70	0.09	0.04	0.016	7.4
50	0.288	6300	20	22	58	165	135	72.5	70	K+ 4	110	75	49.65	2	±3.00	0.17	0.07	0.029	11.1
60	0.50	5900	26	28	70	200	160	84.5	80	K+ 5	120	90	50.15	2	±3.45	0.25	0.11	0.075	18.3
70	0.82	5400	26	28	78	220	178	93.5	90	K+ 5	130	100	50.15	2	±3.90	0.35	0.15	0.13	25.4
80	1.14	5000	30	32	92	240	196	103.5	100	K+ 5	150	120	50.15	2	±4.35	0.40	0.20	0.19	31.4
90	1.64	4700	30	32	100	270	225	115.5	110	K+ 5	170	130	50.15	3	±4.80	0.60	0.30	0.37	46
100	2.30	4300	53	55	110	280	240	125.5	120	K+ 7	180	140	51.15	3	±5.25	0.75	0.35	0.47	54
110	2.88	4000	63	65	120	310	265	135.0	130	K+ 6	190	155	50.65	3	±5.70	1.0	0.45	0.81	72
125	4.60	3700	73	75	138	340	295	157.5	150	K+11	215	175	53.15	3	±6.45	1.3	0.65	1.31	100
140	6.48	3400	83	85	156	390	325	172.5	165	K+11	230	200	53.15	3	±7.20	1.6	0.85	2.35	140
160	9.24	3100	118	120	180	435	370	199.0	190	K+14	270	230	54.65	3	±8.40	2.6	1.4	4.2	198
180	12.92	2900	138	140	200	480	415	225.0	220	K+16	300	260	55.65	3	±9.60	3.3	1.8	7.4	283
200	18.4	2700	158	160	225	545	465	252.5	245	K+19	340	290	57.15	4	±10.80	4.8	2.5	14	417

Subject to change due to technical improvement.

Curved Tooth Couplings

Construction Series SBkD

Dimension Table No. 243 139

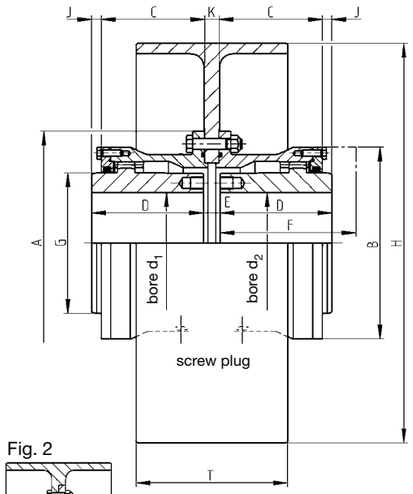

Hub configuration II

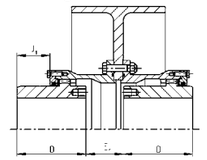

Hub configuration III

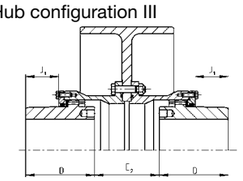

The constructional design of the SBkD series allows different hub configurations in the sleeve, so that larger shaft distances are possible. With tapered bores, the extended E-dimension provides space for the installation of shaft nuts.

Fig. 2

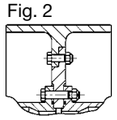

Recommended brake disk allocation			
Coupling size	Brake disk ØH mm	mm	mm
38	200	250	
48	200	250	315
60	200	250	315
70	250	315	400
80	315	400	
90	315	400	
100	400	500	
110	400	500	
125	400	500	630
140	400	500	630
160	500	630	710
180	500	630	710
200	630	710	
225	710		

Brake disk dimensions ØH mm	T mm	K mm	Mass 4) moment of inertia kgm²	Weight 4) kg
200	75	8	0.033	4.22
250	95	9	0.09	7.25
315	118	11	0.28	13.5
400	150	14	0.90	28
500	190	18	2.35	45
630	236	22	7.50	94
710	265	22	12.5	123

Split brake disks allow the vertical installation and removal of the machines.

Torsional stiffness values are contained in the data table for SBk-type couplings.

The dismounting dimension F is required for the vertical installation and removal of the machines and O-ring replacement.

For coupling selection,
please see page 6.

1) The speed n_{max} depends on the permissible circumferential speed of the brake disk. The specifications of the brake supplier have to be observed!

The maximum speed is determined by the misalignment.

Please see table 'Speed Factors'.

2) Based on a permissible angular misalignment of $\Delta K_{w\ perm.} = 0.75°$ per coupling half.

These values only apply to the couplings, not to the brake.

3) Values of the complete coupling, without brake disk, with bore d_1; $d_{2\ max.}$

4) Weights and mass moments of inertia are based on the largest coupling size allocated.

Other sizes available on request.

Type SBkD Size	Norm. cont. duty P_{KN}/n kW·min	Speed 1) $n_{max.}$ rpm	Dimensions bore $d_1;d_2$ min mm	max mm	A mm	B mm	C mm	D mm	E mm	E_1 mm	E_2 mm	F mm	G mm	J mm	J_1 mm	Max. static radial misalign- ment $\Delta K_{max.}$ 2) mm	Total grease quantity kg	Mass 3) moment of inertia J kgm²	Weight 3) kg
38	0.082	7500	12	42	118	92	56.5	60	K+3	K+ 15	K+ 27	90	60.0	5.0	17.0	±1.01	0.11	0.007	4.2
48	0.146	6900	22	55	145	115	66.0	70	K+2	K+ 23	K+ 44	100	77.0	5.0	26.0	±1.26	0.12	0.017	7.8
60	0.288	6300	22	65	165	135	76.0	80	K+3	K+ 30	K+ 57	110	90.0	5.5	32.5	±1.50	0.20	0.035	11.7
70	0.50	5900	28	80	200	160	87.5	90	K+3	K+ 39	K+ 75	120	112.5	4	40	±1.73	0.28	0.085	19.8
80	0.82	5400	28	92	220	178	96.5	100	K+1	K+ 43	K+ 85	130	128.0	4	46	±1.95	0.45	0.13	26.5
90	1.14	5000	32	105	240	196	106.5	110	K+3	K+ 51	K+ 99	140	145.0	5	53	±2.25	0.65	0.21	32.5
100	1.64	4700	32	115	270	225	119.5	125	K+3	K+ 54	K+105	150	160.5	7	58	±2.40	0.80	0.40	46
110	2.30	4300	55	126	280	240	129.5	140	K+3	K+ 57	K+111	170	176.0	12	66	±2.70	0.95	0.53	57
125	2.88	4000	65	145	310	265	139.0	150	K+4	K+ 62	K+120	180	200.5	13	71	±2.85	1.3	0.84	59
140	4.60	3700	75	162	340	295	162.5	170	K+5	K+ 75	K+145	200	224.5	10	80	±3.30	1.6	1.5	111
160	6.48	3400	85	185	390	325	177.5	190	K+7	K+ 79	K+151	230	256.5	16	88	±3.60	2.0	2.6	153
180	9.24	3100	120	210	435	370	205.0	220	K+6	K+ 94	K+182	260	288.5	18	106	±4.20	3.4	4.7	217
200	12.92	2900	140	230	480	415	235.0	250	K+8	K+110	K+212	300	320.5	19	121	±4.80	4.4	8.1	303
225	18.4	2700	160	260	545	465	262.5	280	K+9	K+121	K+233	330	362.0	22	134	±5.40	6.6	15.2	442

Subject to change due to technical improvement.

Curved Tooth Couplings

Construction Series SBkT

Dimension Table No. 243 140

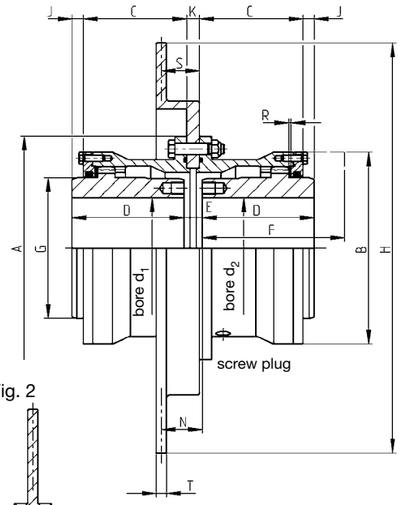

Fig. 2

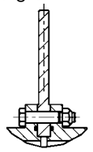

As an option, the couplings can be supplied with straight brake disk.

Hub configuration II

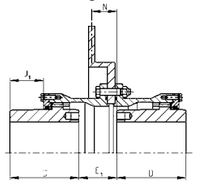

Hub configuration III

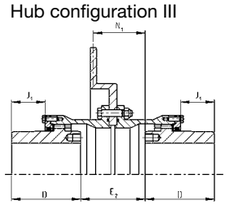

The constructional design of the SBkT series allows different hub configurations in the sleeve, so that larger shaft distances are possible. With tapered bores, the extended E-dimension provides space for the installation of shaft nuts.

Coupling size	Recommended brake disk allocation: Brake disk ØH (nominal dimension) mm	mm	mm	mm
38	300			
48	300			
60	350			
70	400	460	515	
80	400	460	515	
90	460	515	610	
100	460	515	610	710
110	515	610	710	
125	515	610	710	810
140	610	710	810	
160	610	710	810	915
180	710	810	915	
200	710	810	915	
225	810	915		

Brake disk dimensions ØH mm	T mm	K mm	S mm	Mass [4] moment of inertia kgm²	Weight [4] kg
300	12.7	8	34.65	0.099	6.7
356	12.7	10	47.65	0.19	10
406	12.7	13	47.65	0.30	12
457	12.7	16	47.65	0.48	16
514	12.7	16	47.65	0.57	20
610	12.7	16	47.65	1.5	26
711	12.7	18	47.65	2.9	39
812	12.7	23	47.65	5.8	61
915	12.7	23	47.65	10.0	92

For coupling selection, please see page 6.

1) The speed n_{max} depends on the permissible circumferential speed of the brake disk. The specifications of the brake supplier have to be observed!

The maximum speed capacity is determined by the misalignment. Please see table 'Speed Factors'.

2) Based on a permissible angular misalignment of $\Delta K_{w\ perm.} = 0{,}75°$ per coupling half.

These values only apply to the couplings, not to the brake.

3) Values of the complete coupling, without brake disk, with bore d_1; $d_{2\ max.}$

4) Values are based on the largest coupling size allocated.

5) The axial clearances have to be checked in relation to the brake calipers.

The dismounting dimension F is required for the vertical installation and removal of the machines and O-ring replacement.

Torsional stiffness values are contained in the data table for SBk-type couplings.

Other sizes available on request.

Type SBkT Size	Norm. cont. duty P_{KN}/n kW·min	Speed [1] $n_{max.}$ rpm	Dimensions: bore $d_1;d_2$ min mm	max mm	A mm	B mm	C mm	D mm	E mm	E_1 mm	E_2 mm	F mm	G mm	J mm	J_1 mm	N mm	N_1 mm	R[5] mm	Max. static radial misalignment $\Delta K_{max.}$ [2] mm	Total grease quantity kg	Mass [3] moment of inertia J kgm²	Weight [3] kg
38	0.082	7500	12	42	118	92	56.5	60	K+ 3	K+ 15	K+ 27	90	60.0	5.0	17.0	36.15	48.15	2	±1.01	0.11	0.007	4.2
48	0.146	6900	22	55	145	115	66.0	70	K+ 3	K+ 24	K+ 45	100	77.0	5.5	26.5	36.15	57.15	2	±1.26	0.12	0.017	7.8
60	0.288	6300	22	65	165	135	76.0	80	K+ 5	K+ 32	K+ 59	110	90.0	6.5	33.5	50.15	77.15	2	±1.50	0.20	0.035	11.7
70	0.50	5900	28	80	200	160	87.5	90	K+ 5	K+ 41	K+ 77	120	112.5	5.0	41	50.15	86.15	2	±1.73	0.28	0.085	19.8
80	0.82	5400	28	92	220	178	96.5	100	K+ 5	K+ 47	K+ 89	130	128.0	6.0	48	50.15	92.15	2	±1.95	0.45	0.13	26.5
90	1.14	5000	32	105	240	196	106.5	110	K+ 7	K+ 55	K+103	140	145.0	7.0	55	51.15	99.15	2	±2.25	0.65	0.21	32.5
100	1.64	4700	32	115	270	225	119.5	125	K+ 5	K+ 56	K+107	150	160.5	8.0	59	50.15	101.15	3	±2.40	0.80	0.40	46
110	2.30	4300	55	126	280	240	129.5	140	K+ 7	K+ 61	K+115	170	176.0	14	68	51.15	105.15	3	±2.70	0.95	0.53	57
125	2.88	4000	65	145	310	265	139.0	150	K+ 8	K+ 66	K+124	180	200.5	15	73	51.65	109.65	3	±2.85	1.3	0.84	59
140	4.60	3700	75	162	340	295	162.5	170	K+11	K+ 81	K+151	200	224.5	13	83	53.15	123.15	3	±3.30	1.6	1.5	111
160	6.48	3400	85	185	390	325	177.5	190	K+15	K+ 87	K+159	230	256.5	20	92	55.15	127.15	3	±3.60	2.0	2.6	153
180	9.24	3100	120	210	435	370	205.0	220	K+14	K+102	K+190	260	288.5	22	110	54.65	142.65	3	±4.20	3.4	4.7	217
200	12.92	2900	140	230	480	415	235.0	250	K+18	K+120	K+222	300	320.5	24	126	56.65	158.65	3	±4.80	4.4	8.1	303
225	18.4	2700	160	260	545	465	262.5	280	K+21	K+133	K+245	330	362.0	28	140	58.15	170.15	4	±5.40	6.6	15.2	442

Subject to change due to technical improvement.

Curved Tooth Couplings

Construction Series LBkD

Dimension Table No. 243 141

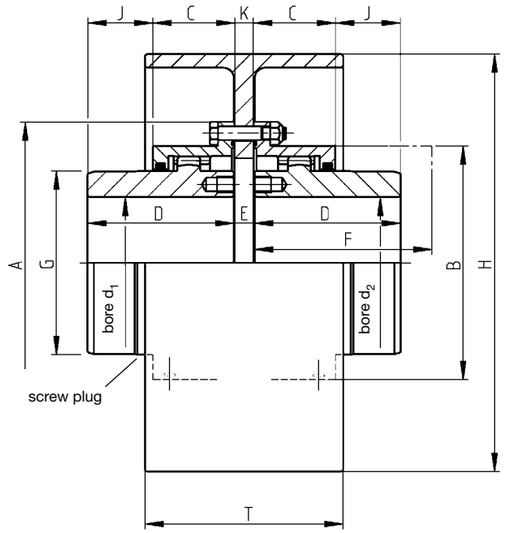

Fig. 2

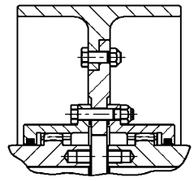

Coupling size	Recommended brake disk allocation: Brake disk ØH mm	mm	mm
32	200		
38	200	250	
48	200	250	315
60	200	250	315
70	250	315	400
80	315	400	
90	315	400	
100	400	500	
110	400	500	
125	400	500	630
140	400	500	630
160	500	630	710
180	500	630	710
200	630	710	
225	710		

Brake disk dimensions ØH mm	T mm	K mm	Mass [4] moment of inertia kgm²	Weight [4] kg
200	75	8	0.033	4.22
250	95	9	0.09	7.25
315	118	11	0.28	13.5
400	150	14	0.90	28
500	190	18	2.35	45
630	236	22	7.50	94
710	265	22	12.5	123

Split brake disks allow the vertical installation and removal of the machines.

The dismounting dimension F is required for the vertical installation and removal of the machines and O-ring replacement.

For coupling selection, please see page 6.

1) The speed n_{max} depends on the permissible circumferential speed of the brake disk. The specifications of the brake supplier have to be observed!

2) Based on a permissible angular misalignment of $\Delta K_{w\ perm.} = 0.75°$ per coupling half.

These values only apply to the couplings, not to the brake.

3) Values for the complete coupling, without brake disk, with bore d_1; $d_{2\ max.}$

4) Weights and mass moments of inertia are based on the largest coupling size allocated.

Torsional stiffness values are given in the data table for LBk-type couplings.

Other sizes available on request.

Type LBkD Size	Norm. cont. duty P_{KN}/n kW·min	Speed [1] $n_{max.}$ rpm	Dimensions: bore $d_1;d_2$ min mm	max mm	A mm	B mm	C mm	D mm	E mm	F mm	G mm	J mm	Max. static radial misalignment $\Delta K_{max.}$ [2] mm	Total grease quantity kg	Mass[3] moment of inertia J kgm²	Weight [3] kg
32	0.050	8500	12	35	105	74	44.5	50	K+ 2	80	48	7.0	±0.57	0.03	0.003	2.9
38	0.082	7500	12	42	115	87	50.0	60	K+ 3	90	60	12.0	±0.69	0.04	0.006	4.3
48	0.146	6900	22	55	145	108	50.0	70	K+ 3	100	77	21.5	±0.71	0.06	0.015	7.0
60	0.288	6300	22	65	165	125	52.5	80	K+ 4	110	90	29.5	±0.77	0.10	0.026	9.3
70	0.50	5900	28	80	195	146	54.5	90	K+ 3	120	112	37.0	±0.78	0.15	0.059	14.7
80	0.82	5400	28	92	215	168	58.0	100	K+ 3	130	128	43.5	±0.84	0.22	0.097	20.0
90	1.14	5000	32	105	230	185	62.0	110	K+ 5	140	145	50.5	±0.92	0.29	0.14	25.4
100	1.64	4700	32	115	265	210	72.0	125	K+ 4	150	160	55.0	±1.08	0.44	0.28	38.0
110	2.30	4300	55	126	270	224	78.5	140	K+ 4	170	176	63.5	±1.23	0.55	0.36	45.6
125	2.88	4000	65	145	305	245	85.5	150	K+ 6	180	200	67.5	±1.34	0.79	0.64	62
140	4.60	3700	75	162	330	270	96.5	170	K+ 6	200	224	76.5	±1.44	0.90	1.03	82
160	6.48	3400	85	185	375	305	108.0	190	K+ 7	230	256	85.5	±1.70	1.23	1.5	93
180	9.24	3100	120	210	425	348	122.0	220	K+ 6	260	288	101.0	±1.89	1.9	3.6	177
200	12.92	2900	140	230	470	392	133.0	250	K+ 8	300	320	121.0	±2.12	2.4	6.2	245
225	18.4	2700	160	260	535	437	154.5	280	K+10	330	362	130.5	±2.42	3.7	11.2	347

Subject to change due to technical improvement.

Curved Tooth Couplings

Construction Series LBkT

Dimension Table No. 243 142

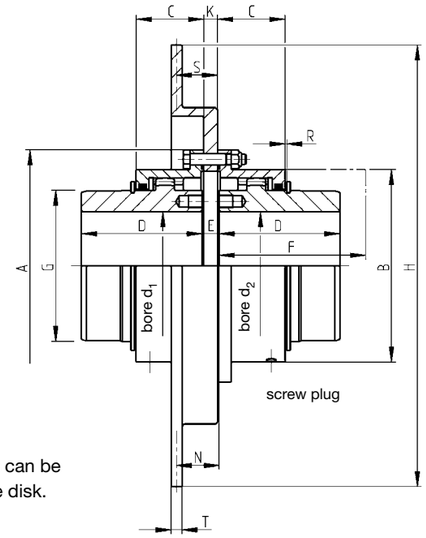

Fig. 2

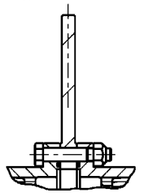

As an option, the couplings can be supplied with straight brake disk.

The dismounting dimension F is required for the vertical installation and removal of the machines and O-ring replacement.

Torsional stiffness values are contained in the data table for LBk-type couplings.

For coupling selection,
please see page 6.

1) The speed n_{max} depends on the circumferential speed of the brake disk. The specifications of the brake supplier have to be observed!

2) Based on a permissible angular misalignment of $\Delta K_{w\ perm.} = 0.75°$ per coupling half.

These values only apply to the couplings, not to the brake.

3) Values for the complete coupling, without brake disk, with bore d_1; $d_{2\ max.}$

Recommended brake disk allocation				
Coupling size	Brake disk ØH (nominal dimension) mm	mm	mm	mm
32	300			
38	300			
48	300			
60	350			
70	400	460	515	
80	400	460	515	
90	460	515	610	
100	460	515	610	710
110	515	610	710	
125	515	610	710	810
140	610	710	810	
160	610	710	810	915
180	710	810	915	
200	710	810	915	
225	810	915		

Brake disk dimensions ØH mm	T mm	K mm	S mm	Mass 4) moment of inertia kgm²	Weight 4) kg
300	12.7	8	34.65	0.098	6.7
356	12.7	10	47.65	0.19	10
406	12.7	13	47.65	0.30	12
457	12.7	16	47.65	0.48	16
514	12.7	16	47.65	0.57	20
610	12.7	16	47.65	1.5	26
711	12.7	18	47.65	2.9	39
812	12.7	23	47.65	5.8	61
915	12.7	23	47.65	10.0	92

4) Weights and mass moments of inertia are based on the largest coupling size allocated.

5) The axial clearances have to be checked in relation to the brake calipers.

Other sizes available on request.

Type LBkT Size	Norm. cont. duty P_{KN}/n kW·min	Speed 1) $n_{max.}$ rpm	Dimensions bore $d_1;d_2$ min mm	max mm	A mm	B mm	C mm	D mm	E mm	F mm	G mm	N mm	R5) mm	Max. static radial misalignment $\Delta K_{max.}$ 2) mm	Total grease quantity kg	Mass 3) moment of inertia J kgm²	Weight 3) kg
32	0.050	8500	12	35	105	74	44.5	50	K+ 2	80	48	35.65	1.5	±0.57	0.03	0.003	2.9
38	0.082	7500	12	42	115	87	50.0	60	K+ 3	90	60	36.15	1.5	±0.69	0.04	0.006	4.3
48	0.146	6900	22	55	145	108	50.0	70	K+ 3	100	77	36.15	2	±0.71	0.06	0.015	7.0
60	0.288	6300	22	65	165	125	52.5	80	K+ 4	110	90	49.65	2	±0.77	0.10	0.026	9.3
70	0.50	5900	28	80	195	146	54.5	90	K+ 3	120	112	49.15	2	±0.78	0.15	0.059	14.7
80	0.82	5400	28	92	215	168	58.0	100	K+ 3	130	128	49.15	2	±0.84	0.22	0.097	20.0
90	1.14	5000	32	105	230	185	62.0	110	K+ 5	140	145	50.15	2	±0.92	0.29	0.14	25.4
100	1.64	4700	32	115	265	210	72.0	125	K+ 4	150	160	49.65	3	±1.08	0.44	0.28	38.0
110	2.30	4300	55	126	270	224	78.5	140	K+ 4	170	176	49.65	3	±1.23	0.55	0.36	45.6
125	2.88	4000	65	145	305	245	85.5	150	K+ 6	180	200	50.65	3	±1.34	0.79	0.64	62
140	4.60	3700	75	162	330	270	96.5	170	K+ 6	200	224	50.65	3	±1.44	0.90	1.03	82
160	6.48	3400	85	185	375	305	108.0	190	K+ 7	230	256	51.15	3	±1.70	1.23	1.5	93
180	9.24	3100	120	210	425	348	122.0	220	K+ 6	260	288	50.65	3	±1.89	1.9	3.6	177
200	12.92	2900	140	230	470	392	133.0	250	K+ 8	300	320	51.65	3	±2.12	2.4	6.2	245
225	18.4	2700	160	260	535	437	154.5	280	K+10	330	362	52.65	3	±2.42	3.7	11.2	347

Subject to change due to technical improvement.

Curved Tooth Couplings

Construction Series VSB

Dimension Table No. 243 143

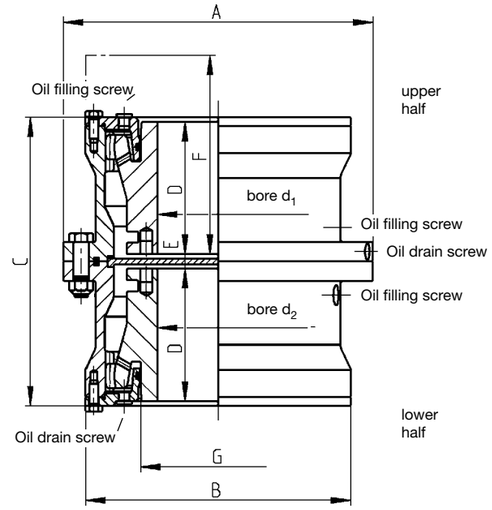

Required oil quantity for oil lubrication	min. speed upper half litres	min. speed lower half litres	max. speed upper half litres	max. speed lower half litres
Coupling size				
30	0.070	0.016	0.04	0.016
40	0.095	0.025	0.05	0.025
50	0.17	0.07	0.06	0.07
60	0.29	0.11	0.13	0.11
70	0.36	0.15	0.16	0.15
80	0.50	0.21	0.22	0.21
90	0.78	0.31	0.35	0.31
100	0.98	0.43	0.40	0.43
110	1.3	0.57	0.54	0.57
125	1.6	0.70	0.68	0.70
140	2.1	0.93	0.9	0.93
160	3.1	1.3	1.3	1.3
180	4.5	1.5	2.0	1.5
200	6.8	2.3	2.8	2.3

Couplings of the VSB series are intended for vertical installation. They are equipped with two separate lubricant chambers and optionally suitable for oil or grease lubrication.

In case of oil lubrication, it has to be observed that different oil quantities are required for the lower and upper speed range.

The dismounting dimension F is required for the vertical installation and removal of the machines and O-ring replacement.

For coupling selection,
please see page 6.

The couplings can also be supplied with a spacer or intermediate shaft so as to accommodate larger shaft distances.

Torsional stiffness values are contained in the data table for SB type couplings.

1) Based on a permissible angular misalignment of $\Delta K_{w\ perm.} = 1.5°$ per coupling half.

Higher misalignments are possible, but require special measures.

2) Values for the complete coupling, with bore d_1; $d_{2\ max.}$

3) The maximum speed capacity is determined by the misalignment. Please see table 'Speed Factors'.

Other sizes available on request.

Type VSB Size	Norm. cont. duty P_{KN}/n kW·min	Speed 3) min rpm	max rpm	Dimensions bore $d_1;d_2$ pre mm	min mm	max mm	A mm	B mm	C mm	D mm	E mm	F mm	G mm	Max. static radial misalignment $\Delta K_{r\ max.}$ 1) mm	Grease quantity at min. and max. speed upper half kg	lower half kg	Mass 2) moment of inertia J kgm²	Weight 2) kg
30	0.082	1300	7500	10	12	32	118	92	110	50	7	75	45	±1.95	0.070	0.016	0.007	4.6
40	0.146	1300	6900	20	22	46	145	115	131	60	8	90	60	±2.70	0.095	0.025	0.018	7.9
50	0.288	1300	6300	20	22	58	165	135	151	70	8	110	75	±3.00	0.17	0.07	0.035	11.8
60	0.50	900	5900	26	28	70	200	160	175	80	9	120	90	±3.45	0.29	0.11	0.084	19.1
70	0.82	900	5400	26	28	78	220	178	197	90	11	130	100	±3.90	0.36	0.15	0.14	27
80	1.14	900	5000	30	32	92	240	196	217	100	11	150	120	±4.35	0.50	0.21	0.21	34
90	1.64	650	4700	30	32	100	270	225	241	110	13	170	130	±4.80	0.78	0.31	0.40	49
100	2.30	650	4300	53	55	110	280	240	261	120	13	180	140	±5.25	0.98	0.43	0.57	56
110	2.88	650	4000	63	65	120	310	265	282	130	14	190	155	±5.70	1.3	0.57	0.85	75
125	4.60	650	3700	73	75	138	340	295	325	150	15	215	175	±6.45	1.6	0.70	1.40	104
140	6.48	500	3400	83	85	156	390	325	355	165	15	230	200	±7.20	2.1	0.93	2.50	147
160	9.24	500	3100	118	120	180	435	370	410	190	18	270	230	±8.40	3.1	1.3	4.41	204
180	12.92	500	2900	138	140	200	480	415	462	220	18	300	260	±9.60	4.5	1.5	7.62	292
200	18.4	500	2700	158	160	225	545	465	519	245	21	340	290	±10.80	6.8	2.3	14.3	430

Subject to change due to technical improvement.

Curved Tooth Couplings

Construction Series VLBk

Dimension Table No. 243 144

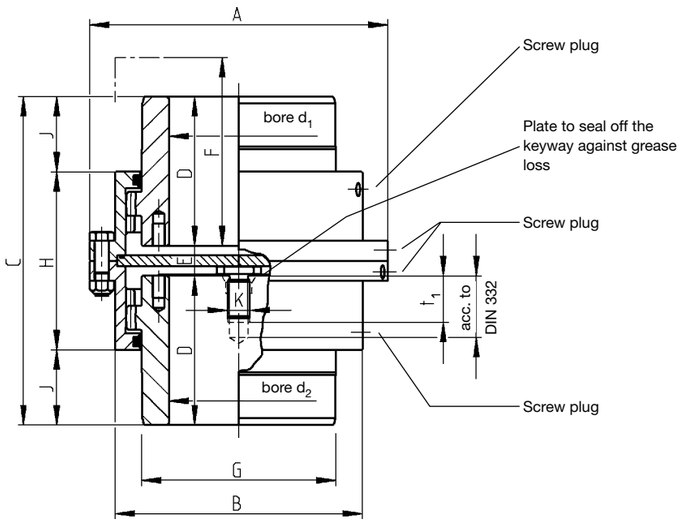

Centering bores with thread acc. to DIN 332		
Diameter range of shaft ends in mm	K mm	t_1 mm
over 24 to 30	M10	22
over 30 to 38	M12	28
over 38 to 50	M16	36
over 50 to 85	M20	42
over 85 to 130	M24	50
over 130 to 160	M30	60
over 160 to 200	M36	80
over 200 to 250	M48	100
over 250 to 300	M56	125

Couplings of the VLBk series are intended for vertical installation. They are equipped with two separate lubricant chambers and optionally suitable for oil or grease lubrication.

The couplings can also be supplied with a spacer or intermediate shaft so as to accommodate larger shaft distances.

Torsional stiffness values are contained in the data table for LBk-type couplings.

For coupling selection, please see page 6.

The dismounting dimension F is required for the vertical installation and removal of the machines and O-ring replacement.

1) Based on a permissible angular misalignment of $\Delta K_{w\ perm.} = 0{,}75°$ per coupling half.
Higher misalignment capacity is possible, but requires special measures.

2) Values for the complete coupling, with bore d_1; $d_{2\ max.}$

3) The maximum speed capacity is determined by the misalignment. Please see table 'Speed Factors'.

Other sizes available on request.

Type VLBk Size	Norm. cont. duty $\frac{P_{KN}}{n}$ kW·min	Speed 3) $n_{max.}$ rpm	Dimensions bore $d_1;d_2$ min mm	max mm	A mm	B mm	C mm	D mm	E mm	F mm	G mm	H mm	J mm	Max. static radial misalignment $\Delta K_{max.}$ 1) mm	Grease quantity per coupling half kg	Mass 2) moment of inertia J kgm²	Weight 2) kg
32	0.050	8500	12	35	105	74	106	45	16	75	48	90	8.0	±0.57	0.028	0.004	3.0
38	0.082	7500	12	42	115	87	127	55	17	85	60	101	13.0	±0.69	0.052	0.006	4.5
48	0.146	6900	22	55	145	108	147	65	17	95	77	102	22.5	±0.71	0.069	0.016	7.6
60	0.288	6300	22	65	165	125	168	75	18	105	90	107	30.5	±0.77	0.11	0.025	10.0
70	0.50	5900	28	80	195	146	191	85	21	115	112	112	39.5	±0.78	0.14	0.062	16.0
80	0.82	5400	28	92	215	168	212	95	22	125	128	119	46.5	±0.84	0.21	0.103	21.5
90	1.14	5000	32	105	230	185	234	105	24	135	145	127	53.5	±0.92	0.27	0.150	26.5
100	1.64	4700	32	115	265	210	266	120	26	155	160	148	59.0	±1.08	0.40	0.303	41.0
110	2.30	4300	55	126	270	224	297	135	27	170	176	161	68.0	±1.23	0.52	0.390	48.5
125	2.88	4000	65	145	305	245	317	145	27	180	200	175	71.0	±1.34	0.58	0.675	65.0
140	4.60	3700	75	162	330	270	359	165	29	200	224	197	81.0	±1.44	0.69	1.10	87.5
160	6.48	3400	85	185	375	305	400	185	30	225	256	221	89.5	±1.70	0.94	1.97	126
180	9.24	3100	120	210	425	348	462	215	32	255	288	250	106	±1.89	1.5	3.74	185
200	12.92	2900	140	230	470	392	524	245	34	290	320	272	126	±2.12	2.3	6.39	255
225	18.4	2700	160	260	535	437	587	275	37	330	362	315	136	±2.42	3.1	11.62	363

Subject to change due to technical improvement.

Curved Tooth Couplings

Construction Series HBk

Dimension Table No. 243 145

Fig. 1: Sizes 140 - 450

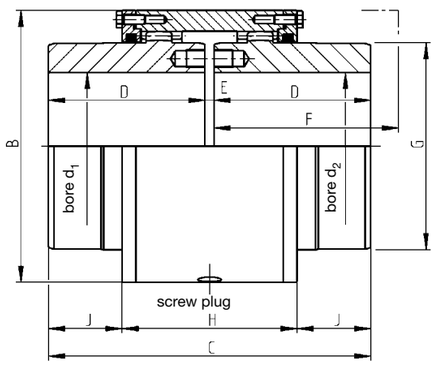

Fig. 2: Sizes 30 - 125 (TRAVEX®)

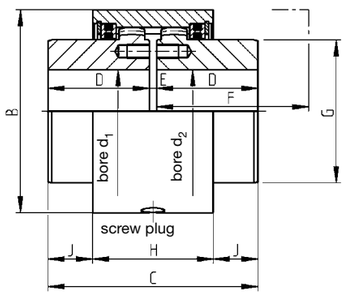

For coupling selection, please see page 6.

The dismounting dimension F is required for the vertical installation and removal of the machines and O-ring replacement.

Torsional stiffness values are contained in the data table for HBk-type couplings.

1) Based on a permissible angular misalignment of $\Delta K_{w\ perm.} = 0.75°$ per coupling half.

Higher misalignment capacity is possible, but requires special measures.

2) Values for the complete coupling, with bore d_1; $d_{2\ max.}$

3) The maximum speed capacity is determined by the misalignment. Please see table 'Speed Factors'.

Sizes 30 to 160 available from stock.
Other sizes available on request.

Type HBk Size	Norm. cont. duty $\frac{P_{KN}}{n}$ kW·min	Speed 3) $n_{max.}$ rpm	Dimensions bore $d_1;d_2$ min mm	max mm	B mm	C mm	D mm	E mm	F mm	G mm	H mm	J mm	Max. static radial misalignment $\Delta K_{max.}$ 1) mm	Total grease quantity kg	Mass 2) moment of inertia J kgm²	Weight 2) kg
30	0.047	9000	12	32	74	85	40	5	85	45	73	6	±0.67	0.02	0.0015	1.8
40	0.115	7500	18	42	95	105	50	5	95	60	81	12	±0.70	0.04	0.0043	3.3
50	0.183	6900	20	55	115	125	60	5	110	78	89	18	±0.78	0.06	0.0108	5.7
60	0.387	6300	24	65	138	145	70	5	120	95	102	21.5	±0.85	0.07	0.0288	10.3
75	0.691	5600	28	78	158	166	80	6	130	110	109	28.5	±0.99	0.10	0.0528	14.3
90	1.16	5000	32	95	188	207	100	7	150	135	117	45	±1.08	0.17	0.114	22.6
105	1.82	4500	35	110	220	228	110	8	165	155	131	48.5	±1.20	0.28	0.237	35.5
125	2.73	4000	38	128	250	248	120	8	175	180	149	49.5	±1.36	0.35	0.45	50
140	4.60	3700	75	162	295	350	170	10	200	224.5	190	80	±1.44	0.82	1.15	89
160	6.48	3400	85	185	325	392	190	12	230	256.5	214	89	±1.70	1.2	1.9	120
180	9.24	3100	120	210	370	452	220	12	260	288.5	240	106	±1.89	1.7	3.0	174
200	12.92	2900	140	230	415	514	250	14	300	320.5	272	121	±2.12	2.2	6.2	251
225	18.4	2700	160	260	465	576	280	16	330	362	308	134	±2.42	3.5	11.6	350
250	25.6	2400	160	280	510	620	300	20	350	400	292	164	±2.46	3.8	14.8	435
265	32.8	2200	180	310	560	680	330	20	380	440	332	174	±2.83	4.5	24.5	600
280	41.0	2100	200	325	595	680	330	20	380	460	292	194	±2.23	5	28.4	636
315	51.4	2000	220	360	660	740	360	20	420	510	330	205	±2.54	5.5	47.5	840
335	64.8	1900	240	380	675	780	380	20	440	535	342	219	±2.61	6	56.2	960
355	82.0	1800	260	410	725	825	400	25	460	580	368	228.5	±2.83	7	78.5	1150
375	98.6	1700	280	440	795	865	420	25	480	620	416	224.5	±3.26	11	118.6	1465
400	118.3	950	330	470	840	905	440	25	500	665	464	220.5	±3.77	16	158	1720
425	138.0	900	355	500	890	945	460	25	520	710	493	226	±4.03	19	221	2120
450	165.1	875	370	520	925	990	480	30	550	730	506	242	±4.14	20	261	2290

Subject to change due to technical improvement.

Curved Tooth Couplings

Allocation to Standard Motors

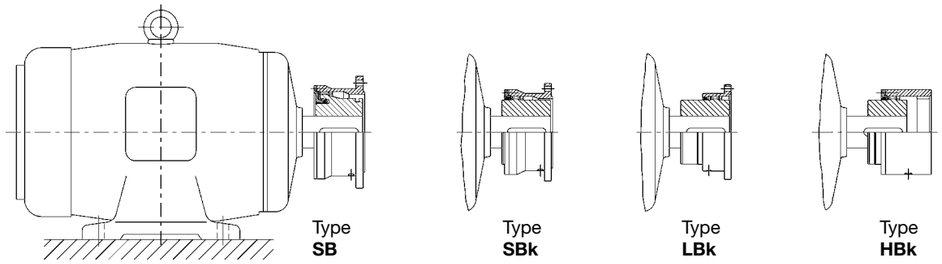

Three-phase induction motors acc. to IEC						Allocation of coupling size			
	Power kW at rpm				Cyl. shaft end Ø x length	Coupling series			
Size	3000	1500	1000	750	mm	SB	SBk	LBk	HBk
90 S	1.5	1.1	0.75	0.37	24 x 50	30	–	32	30
90 L	2.2	1.5	1.1	0.55	24 x 50	30	–	32	30
100 L	3	2.2	1.5	0.75	28 x 60	30	–	32	30
"	–	3	–	1.1	28 x 60	30	–	32	30
112 M	4	4	2.2	1.5	28 x 60	30	–	32	30
132 S	5.5	5.5	3	2.2	38 x 80	40	38	38	40
"	7.5	–	–	–	38 x 80	40	38	38	40
132 M	–	7.5	4	3	38 x 80	40	38	38	40
"	–	–	5.5	–	38 x 80	40	38	38	40
160 M	11	11	7.5	4	42 x 110	40	38	38	40
"	15	–	–	5.5	42 x 110	40	38	38	40
160 L	18.5	15	11	7.5	42 x 110	40	38	38	40
180 M	22	18.5	–	–	48 x 110	50	48	48	50
180 L	–	22	15	11	48 x 110	50	48	48	50
200 L	30	–	18.5	–	55 x 110	50	48	48	50
"	37	30	22	15	55 x 110	50	48	48	50
225 S	–	37	–	18.5	60 x 140	60	60	60	60
225 M	45	–	–	–	55 x 110	50	48	48	50
"	–	45	30	22	60 x 140	60	60	60	60
250 M	55	–	–	–	60 x 140	60	60	60	60
"	–	55	37	30	65 x 140	60	60	60	60
280 S	75	–	–	–	65 x 140	60	60	60	60
"	–	75	45	37	75 x 140	70	70	70	75
280 M	90	–	–	–	65 x 140	60	60	60	60
"	–	90	55	45	75 x 140	70	70	70	75
315 S	110	–	–	–	65 x 140	60	60	60	60
"	–	110	75	55	80 x 170	80	70	70	90
315 M	132	–	–	–	65 x 140	60	60	60	60
"	–	132	90	75	80 x 170	80	70	70	90
315 L	160	–	–	–	65 x 140	60	60	60	60
"	200	–	–	–	65 x 140	60	60	60	60
315 L	–	160	110	90	80 x 170	80	70	70	90
"	–	200	132	110	80 x 170	80	70	70	90
355 L	250	–	–	–	75 x 140	70	70	70	75
"	315	–	–	–	75 x 140	70	70	70	75
355 L	–	250	160	132	95 x 170	90	90	90	90
"	–	315	200	160	95 x 170	90	90	90	90
"	–	–	250	200	95 x 170	90	90	90	90
400 L	355	–	–	–	80 x 170	80	70	70	90
"	400	–	–	–	80 x 170	80	70	70	90
"	–	355	–	–	100 x 210	90	90	90	105
"	–	400	315	250	100 x 210	90	90	90	105
450	500	–	–	–	80 x 170	80	70	70	90
"	630	–	–	–	80 x 170	80	70	70	90
"	–	500	400	315	110 x 210	100	100	100	105
"	–	630	500	400	110 x 210	100	100	100	105

Subject to change due to technical improvement.

Distance Plates

for Curved Tooth Couplings

Series SB

Dimension Table No. 243 146

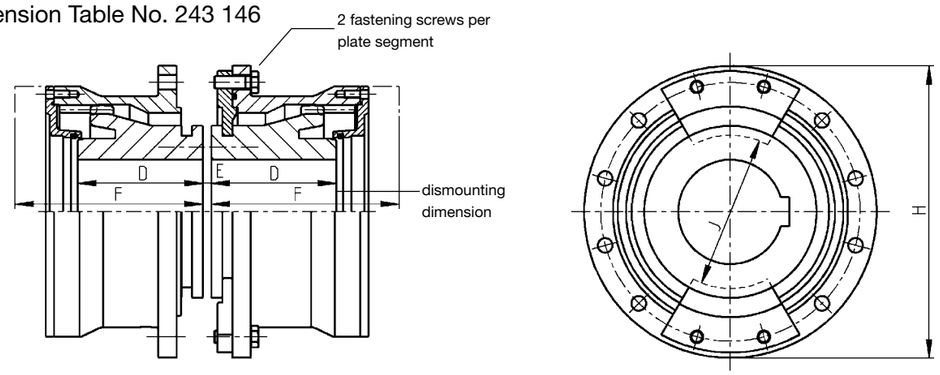

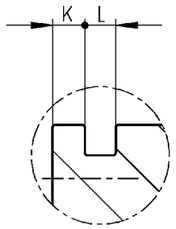

Distance plates are used to radially and axially guide the coupling housing, when the coupling is open. This allows to speed up the driving machine without the driven machine being coupled.

This is, for example, necessary when testing electric motors. Distance plates are only intended for short-time use and are not suitable for continuous operation.

The space - dimension F - is required to install and remove the distance plates.

Other sizes available on request.

Type SB	Dimensions								Dimensions of puller threads in the hubs		
Size	D mm	E mm	F mm	H mm	J mm	K mm	L mm	Size of fastening screws mm	Thread diameter	Hole distance mm	Number of holes
30	50	5	75	115	48	4.5	5	M 6 x 20	–	–	–
40	60	5	90	145	62	4.5	5	M 8 x 20	–	–	–
50	70	5	110	165	75	4.5	6	M 8 x 25	–	–	–
60	80	6	120	195	85	7.0	6	M 10 x 25	–	–	–
70	90	6	130	215	105	8.0	8	M 10 x 30	M 8	94	2
80	100	6	150	230	118	8.5	8	M 10 x 30	M 8	107	2
90	110	8	170	265	128	8.5	10	M 12 x 35	M 10	115	2
100	120	8	180	270	145	10.5	10	M 12 x 35	M 12	130	2
110	130	8	190	305	156	11.0	12	M 16 x 40	M 12	140	2
125	150	10	215	330	180	11.0	12	M 16 x 45	M 12	162	2
140	165	10	230	375	210	12.0	13	M 18 x 45	M 16	190	2
160	190	12	270	425	240	14.0	14	M 22 x 55	M 20	215	2
180	220	12	300	470	270	14.5	14	M 22 x 55	M 24	240	2
200	245	14	340	535	310	15.0	15	M 27 x 60	M 24	270	2
220	270	16	360	580	325	21.5	18	M 27 x 60	M 24	290	2
240	290	18	380	645	350	22.0	19	M 33 x 60	M 24	320	2
260	310	20	400	680	375	23.0	20	M 33 x 60	M 30	340	2
280	340	22	440	745	420	24.0	21	M 36 x 70	M 30	380	2
300	360	24	470	775	435	26.5	24	M 36 x 75	M 36	395	2
320	380	26	500	825	470	28.0	25	M 36 x 75	M 36	430	2

Subject to change due to technical improvement.

Distance Plates
for Curved Tooth Couplings

Series SBk

Dimension table No. 243 147/1

SBk-couplings with standard hub

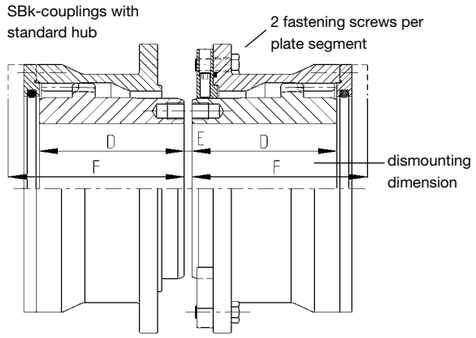

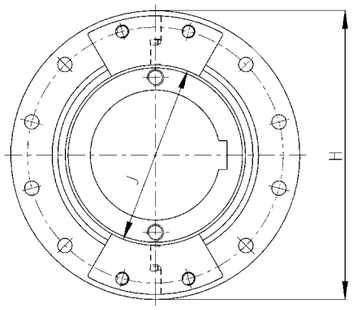

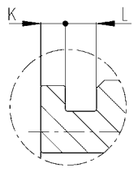

SBRk couplings with hub and retaining ring

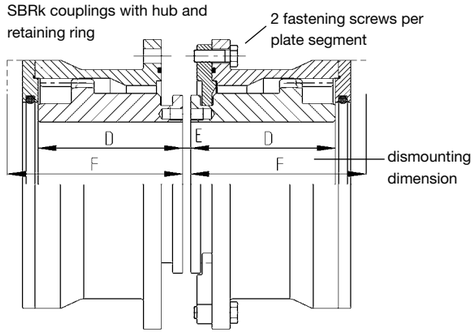

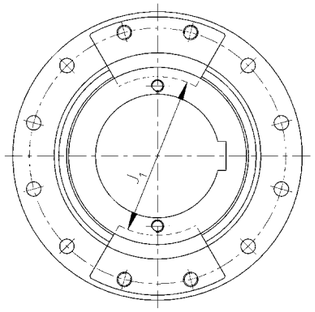

1) Dimension J applies to SBk couplings with normal hub.

2) Dimension J_1 applies to SBRk-couplings with hub and retaining ring

Other sizes available on request.

Type SBk	Dimensions									Dimensions of puller threads in the hubs		
Size	D mm	E mm	F mm	H mm	J[1] mm	J_1[2] mm	K mm	L mm	Size of fastening screws mm	Thread diameter	Hole distance mm	Number of holes
38	60	5	90	115	60	54	4.5	5	M 6 x 20	–	–	–
48	70	5	100	145	76.2	69	4.5	5	M 8 x 20	–	–	–
60	80	6	110	165	89.2	81	4.5	6	M 8 x 25	–	–	–
70	90	6	120	195	111.5	98	7	6	M 10 x 25	M 8	95	2
80	100	6	130	215	127	113	8	8	M 10 x 30	M 12	110	2
90	110	8	140	230	144	128	8.5	8	M 12 x 35	M 12	125	2
100	125	8	150	265	158.5	138	8.5	10	M 12 x 35	M 12	140	2
110	140	8	170	270	174.6	152	10.5	10	M 12 x 35	M 16	150	2
125	150	10	180	305	199.6	171	11	12	M 16 x 40	M 16	170	2
140	170	10	200	330	222.9	195	11	12	M 16 x 45	M 20	190	2
160	190	12	230	375	254.9	225	12	13	M 18 x 45	M 20	220	2
180	220	12	260	425	286.9	255	14	14	M 22 x 55	M 24	245	2
200	250	14	300	470	318.8	290	14.5	14	M 22 x 55	M 24	270	2
225	280	16	330	530	359.8	332	15	15	M 27 x 60	M 24	305	2

Subject to change due to technical improvement.

Distance Plates
for Curved Tooth Couplings

Series LBk

Dimension table No. 243 147/2

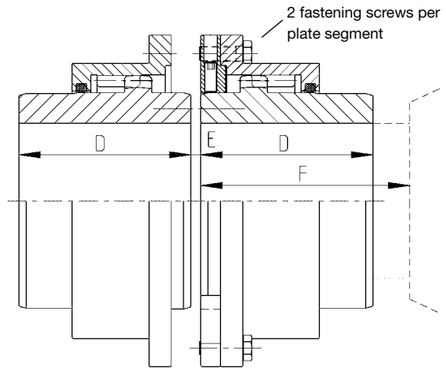

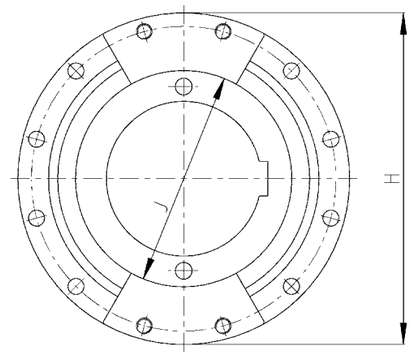

Other sizes available on request.

Type LBk	Dimensions						Dimensions of puller threads in the hubs		
Size	D mm	E mm	F mm	H mm	J mm	Size of fastening screws mm	Thread diameter	Hole distance mm	Number of holes
32	50	4	80	105	48	M 6 x 20	–	–	–
38	60	5	90	115	60	M 6 x 20	–	–	–
48	70	5	100	145	77	M 8 x 20	–	–	–
60	80	6	110	165	90	M 8 x 25	–	–	–
70	90	6	120	195	112.5	M 10 x 25	M 8	95	2
80	100	6	130	215	128	M 10 x 30	M 12	110	2
90	110	8	140	230	145	M 10 x 30	M 12	125	2
100	125	8	150	265	160.5	M 12 x 35	M 12	140	2
110	140	8	170	270	176	M 12 x 35	M 16	150	2
125	150	10	180	305	200.5	M 16 x 40	M 16	170	2
140	170	10	200	330	224.5	M 16 x 45	M 20	190	2
160	190	12	230	375	256.5	M 18 x 45	M 20	220	2
180	220	12	260	425	288.5	M 22 x 55	M 24	245	2
200	250	14	300	470	320.5	M 22 x 55	M 24	270	2
225	280	16	330	530	362	M 27 x 60	M 24	305	2

Subject to change due to technical improvement.

Lubricant Quantities for Spacers

Depending on the design and size, an additional lubricant quantity has to be taken into account for curved tooth couplings with spacer. The length of the spacer is the decisive criterion to define the correct quantity. The tables contain the quantity needed for the spacer with a minimum length of $L = L_{min}$, and the portions required per 10 mm tube length for models with $L > L_{min}$.

The quantities listed in the tables have to be added to the quantity needed for the coupling. The lubricant quantity for each coupling type and size is stated in the dimension tables of the different coupling series.

The ends of longer spacers are closed with end caps. In such cases, an additional lubricant filling is not required for the spacer. Length dimensions of $L > 400$ serve as a guiding value for this.

1) Coupling sizes for which no details are listed in the tables do not require an additional lubricant quantity for the spacer.

Coupling Type **SBL** Size	Min. Spacer Length L_{min} mm	Oil Quantity for Oil Lubrication: Spacer with $L = L_{min}$ litres	Oil Quantity for Oil Lubrication: per 10 mm tube length with $L > L_{min}$ litres	Grease Quantity for Grease Lubrication: Spacer with $L = L_{min}$ kg	Grease Quantity for Grease Lubrication: per 10 mm tube length with $L > L_{min}$ kg
30	75	0.012	0.0016	0.015	0.002
40	80	0.012	0.0015	0.015	0.0019
50	80	0.022	0.0027	0.030	0.0037
60	100	0.033	0.0033	0.053	0.0053
70	100	0.038	0.0038	0.058	0.0058
80	100	0.065	0.0065	0.095	0.0095
90	120	0.09	0.0075	0.144	0.012
100	120	0.12	0.0097	0.168	0.014
110	155	0.28	0.018	0.45	0.029
125	155	0.35	0.022	0.50	0.032
140	175	0.39	0.026	0.63	0.036
160	205	0.45	0.022	0.66	0.032
180	205	1.0	0.049	1.41	0.069
200	240	0.6	0.025	0.84	0.035

Coupling Type **SBLk** Size	Min. Spacer Length L_{min} mm	Grease Quantity: Spacer with $L = L_{min}$ kg	Grease Quantity: per 10 mm tube length with $L > L_{min}$ kg
38	75	0.015	0.002
48	80	0.015	0.0019
60	80	0.030	0.0037
70	100	0.053	0.0053
80	100	0.058	0.0058
90	100	0.095	0.0095
100	120	0.144	0.012
110	120	0.168	0.014
125	155	0.45	0.029
140	155	0.50	0.032
160	175	0.63	0.036
180	205	0.66	0.032
200	205	1.41	0.069
225	240	0.84	0.035

Coupling Type **SRL** Size	Min. Spacer Length L_{min} mm	Oil Quantity for Oil Lubrication: Spacer with $L = L_{min}$ litres	Oil Quantity for Oil Lubrication: per 10 mm tube length with $L > L_{min}$ litres	Grease Quantity for Grease Lubrication: Spacer with $L = L_{min}$ kg	Grease Quantity for Grease Lubrication: per 10 mm tube length with $L > L_{min}$ kg
30	75	0.041	0.0054	0.044	0.0058
40	80	0.042	0.0052	0.045	0.0056
50	80	0.10	0.013	0.11	0.014
60	100	0.23	0.023	0.25	0.025
70	100	0.14	0.014	0.15	0.015
80	100	0.42	0.042	0.45	0.045
90	120	0.62	0.052	0.67	0.056
100	120	0.65	0.054	0.70	0.058
110	155	1.53	0.099	1.7	0.11
125	155	1.86	0.12	2.0	0.13
140	175	2.3	0.13	2.5	0.14
160	205	2.3	0.11	2.5	0.12
180	205	5.3	0.26	5.7	0.28
200	240	2.4	0.1	2.6	0.11

Coupling Type **LBLk** Size	Min. Spacer Length L_{min} mm	Grease Quantity[1]: Spacer with $L = L_{min}$ kg	Grease Quantity[1]: per 10 mm tube length with $L > L_{min}$ kg
32	70	0.07	0.010
38	70	0.11	0.015
48	75	0.15	0.020
60	75	0.20	0.026
70	90	0.28	0.031
80	90	0.42	0.047
90	90	0.45	0.050
100	105	0.74	0.070
110	105	0.79	0.075
125	130	1.2	0.090
140	130	1.3	0.1
160	145	–	–
180	170	–	–
200	170	–	–
225	200	–	–

Coupling Type **SRLk** Size	Min. Spacer Length L_{min} mm	Grease Quantity[1]: Spacer with $L = L_{min}$ kg	Grease Quantity[1]: per 10 mm tube length with $L > L_{min}$ kg
38	75	0.013	0.0017
48	80	–	–
60	80	0.084	0.010
70	100	0.130	0.012
80	100	0.064	0.006
90	100	0.23	0.022
100	120	0.40	0.031
110	120	0.47	0.037
125	155	0.96	0.059
140	155	1.17	0.071
160	175	1.44	0.078
180	205	1.03	0.048
200	205	3.6	0.17
225	240	–	–

Subject to change due to technical improvement.

Torsional Stiffness Data for Curved Tooth Couplings

The torsional stiffness values C_T listed in the tables for the different coupling series apply to the complete coupling in its basic design. The calculations are based on hub bores with the largest possible diameter (d_1; $d_{2\,max}$).

For couplings with spacer or intermediate shaft, these components need to be considered in addition.

The following pages 42 and 43 provide torsional stiffness data for spacers and intermediate shafts.

The total values are determined by using the stated formulae.

Coupling size	Torsional Stiffness Values C_T for the SB Coupling Series – Coupling Type **SB** Nm/rad	**SBR** Nm/rad	**SBD/SBT** Nm/rad	**VSB** Nm/rad
30	$0{,}44 \cdot 10^6$	$0{,}44 \cdot 10^6$	$0{,}44 \cdot 10^6$	$0{,}44 \cdot 10^6$
40	$1{,}44 \cdot 10^6$	$1{,}14 \cdot 10^6$	$1{,}15 \cdot 10^6$	$1{,}14 \cdot 10^6$
50	$2{,}15 \cdot 10^6$	$2{,}15 \cdot 10^6$	$2{,}15 \cdot 10^6$	$2{,}15 \cdot 10^6$
60	$3{,}97 \cdot 10^6$	$3{,}97 \cdot 10^6$	$4{,}00 \cdot 10^6$	$3{,}97 \cdot 10^6$
70	$5{,}45 \cdot 10^6$	$5{,}45 \cdot 10^6$	$5{,}49 \cdot 10^6$	$5{,}45 \cdot 10^6$
80	$9{,}00 \cdot 10^6$	$9{,}00 \cdot 10^6$	$9{,}10 \cdot 10^6$	$9{,}00 \cdot 10^6$
90	$12{,}42 \cdot 10^6$	$12{,}42 \cdot 10^6$	$12{,}49 \cdot 10^6$	$12{,}42 \cdot 10^6$
100	$14{,}26 \cdot 10^6$	$14{,}26 \cdot 10^6$	$14{,}30 \cdot 10^6$	$14{,}26 \cdot 10^6$
110	$18{,}77 \cdot 10^6$	$18{,}77 \cdot 10^6$	$18{,}90 \cdot 10^6$	$18{,}77 \cdot 10^6$
125	$26{,}10 \cdot 10^6$	$26{,}10 \cdot 10^6$	$26{,}21 \cdot 10^6$	$26{,}10 \cdot 10^6$
140	$40{,}36 \cdot 10^6$	$40{,}36 \cdot 10^6$	$38{,}8 \cdot 10^6$	$40{,}36 \cdot 10^6$
160	$64{,}39 \cdot 10^6$	$64{,}39 \cdot 10^6$	$64{,}7 \cdot 10^6$	$64{,}39 \cdot 10^6$
180	$79{,}11 \cdot 10^6$	$79{,}11 \cdot 10^6$	$79{,}4 \cdot 10^6$	$79{,}11 \cdot 10^6$
200	$108{,}12 \cdot 10^6$	$108{,}12 \cdot 10^6$	$108{,}7 \cdot 10^6$	$108{,}12 \cdot 10^6$
220	$169{,}8 \cdot 10^6$	$172{,}46 \cdot 10^6$		
240	$214{,}7 \cdot 10^6$	$219{,}02 \cdot 10^6$		
260	$265{,}7 \cdot 10^6$	$280{,}94 \cdot 10^6$		
280	$349{,}7 \cdot 10^6$	$354{,}35 \cdot 10^6$	Values on request	
300	$399{,}9 \cdot 10^6$	$416{,}72 \cdot 10^6$		
320	$527{,}3 \cdot 10^6$	$553{,}10 \cdot 10^6$		
340	$729{,}6 \cdot 10^6$	$719{,}82 \cdot 10^6$		

Coupling size	Torsional Stiffness Values C_T for the HBk Coupling Series **HBk** Nm/rad
30	$0{,}70 \cdot 10^6$
40	$1{,}71 \cdot 10^6$
50	$3{,}94 \cdot 10^6$
60	$7{,}41 \cdot 10^6$
75	$10{,}81 \cdot 10^6$
90	$19{,}61 \cdot 10^6$
105	$31{,}58 \cdot 10^6$
125	$49{,}88 \cdot 10^6$
140	$72{,}2 \cdot 10^6$
160	$105{,}6 \cdot 10^6$
180	$143{,}5 \cdot 10^6$
200	$196{,}0 \cdot 10^6$
225	$274{,}0 \cdot 10^6$
250	$304{,}7 \cdot 10^6$
265	$406{,}8 \cdot 10^6$
280	$533{,}4 \cdot 10^6$
315	$815{,}0 \cdot 10^6$
335	$860{,}0 \cdot 10^6$
355	$1197{,}4 \cdot 10^6$
375	$1423{,}3 \cdot 10^6$

Coupling size	Torsional Stiffness Values C_T for the SBk/ LBk Coupling Series – Coupling Type **SBk** Nm/rad	**SBRk** Nm/rad	**SBkD/SBkT** Nm/rad	**LBk** Nm/rad	**LBRkn** Nm/rad	**LBkD/LBkT** Nm/rad	**VLBk** Nm/rad
32	–	–	–	$0{,}66 \cdot 10^6$	$0{,}73 \cdot 10^6$	$0{,}66 \cdot 10^6$	$0{,}73 \cdot 10^6$
38	$1{,}1 \cdot 10^6$	$0{,}68 \cdot 10^6$	$1{,}1 \cdot 10^6$	$1{,}25 \cdot 10^6$	$1{,}36 \cdot 10^6$	$1{,}24 \cdot 10^6$	$1{,}36 \cdot 10^6$
48	$2{,}4 \cdot 10^6$	$1{,}94 \cdot 10^6$	$2{,}3 \cdot 10^6$	$2{,}89 \cdot 10^6$	$3{,}10 \cdot 10^6$	$2{,}87 \cdot 10^6$	$3{,}10 \cdot 10^6$
60	$3{,}5 \cdot 10^6$	$3{,}0 \cdot 10^6$	$3{,}5 \cdot 10^6$	$4{,}33 \cdot 10^6$	$4{,}44 \cdot 10^6$	$4{,}3 \cdot 10^6$	$4{,}44 \cdot 10^6$
70	$7{,}0 \cdot 10^6$	$6{,}2 \cdot 10^6$	$7{,}1 \cdot 10^6$	$9{,}27 \cdot 10^6$	$9{,}18 \cdot 10^6$	$9{,}2 \cdot 10^6$	$9{,}18 \cdot 10^6$
80	$10{,}2 \cdot 10^6$	$8{,}9 \cdot 10^6$	$10{,}3 \cdot 10^6$	$13{,}9 \cdot 10^6$	$13{,}5 \cdot 10^6$	$13{,}7 \cdot 10^6$	$13{,}5 \cdot 10^6$
90	$13{,}4 \cdot 10^6$	$12{,}1 \cdot 10^6$	$13{,}6 \cdot 10^6$	$20{,}1 \cdot 10^6$	$19{,}2 \cdot 10^6$	$19{,}9 \cdot 10^6$	$19{,}2 \cdot 10^6$
100	$19{,}5 \cdot 10^6$	$16{,}5 \cdot 10^6$	$19{,}7 \cdot 10^6$	$27{,}3 \cdot 10^6$	$26{,}2 \cdot 10^6$	$27{,}0 \cdot 10^6$	$26{,}2 \cdot 10^6$
110	$22{,}3 \cdot 10^6$	$18{,}8 \cdot 10^6$	$22{,}5 \cdot 10^6$	$31{,}8 \cdot 10^6$	$30{,}4 \cdot 10^6$	$31{,}4 \cdot 10^6$	$30{,}4 \cdot 10^6$
125	$30{,}4 \cdot 10^6$	$25{,}7 \cdot 10^6$	$30{,}7 \cdot 10^6$	$48{,}6 \cdot 10^6$	$45{,}8 \cdot 10^6$	$48{,}0 \cdot 10^6$	$45{,}8 \cdot 10^6$
140	$41{,}1 \cdot 10^6$	$35{,}1 \cdot 10^6$	$41{,}4 \cdot 10^6$	$62{,}9 \cdot 10^6$	$60{,}4 \cdot 10^6$	$60{,}9 \cdot 10^6$	$60{,}4 \cdot 10^6$
160	$61{,}8 \cdot 10^6$	$53{,}2 \cdot 10^6$	$62{,}2 \cdot 10^6$	$91{,}2 \cdot 10^6$	$87{,}3 \cdot 10^6$	$89{,}9 \cdot 10^6$	$87{,}3 \cdot 10^6$
180	$81{,}1 \cdot 10^6$	$71{,}6 \cdot 10^6$	$81{,}6 \cdot 10^6$	$133{,}5 \cdot 10^6$	$125{,}6 \cdot 10^6$	$132{,}0 \cdot 10^6$	$125{,}6 \cdot 10^6$
200	$109{,}1 \cdot 10^6$	$100{,}0 \cdot 10^6$	$109{,}7 \cdot 10^6$	$180{,}0 \cdot 10^6$	$171{,}0 \cdot 10^6$	$177{,}6 \cdot 10^6$	$171{,}0 \cdot 10^6$
225	$145{,}1 \cdot 10^6$	$135{,}0 \cdot 10^6$	$146{,}2 \cdot 10^6$	$241{,}6 \cdot 10^6$	$231{,}1 \cdot 10^6$	$239{,}0 \cdot 10^6$	$231{,}1 \cdot 10^6$
250	$204{,}3 \cdot 10^6$						
265	$257{,}4 \cdot 10^6$						
280	$323{,}8 \cdot 10^6$						
315	$419{,}3 \cdot 10^6$			Values on request			
335	$491{,}6 \cdot 10^6$						
355	$656{,}4 \cdot 10^6$						
375	$875{,}4 \cdot 10^6$						

Subject to change due to technical improvement.

Torsional Stiffness Data, Weights and Mass Moments of Inertia for Couplings with Spacer

Coupling Types **SBL u. SRL** Size	Minimum spacer length $L_{min.}$ mm	Torsional Stiffness C_{T1} Nm/rad	Torsional Stiffness C_{TR} Nm · mm/rad	Mass moment of inertia Spacer with $L = L_{min.}$ kgm²	Mass moment of inertia per 10 mm tube length with $L > L_{min.}$ kgm²	Weight Spacer with $L = L_{min.}$ kg	Weight per 10 mm tube length with $L > L_{min.}$ kg
30	75	$0.38 \cdot 10^6$	$186 \cdot 10^6$	0.00401	0.00011	2.17	0.11
40	80	$0.92 \cdot 10^6$	$274 \cdot 10^6$	0.00876	0.00020	3.2	0.14
50	80	$1.72 \cdot 10^6$	$537 \cdot 10^6$	0.0146	0.00041	4.4	0.18
60	100	$2.94 \cdot 10^6$	$897 \cdot 10^6$	0.0368	0.00072	6.7	0.22
70	100	$4.07 \cdot 10^6$	$1335 \cdot 10^6$	0.055	0.00113	8.2	0.29
80	100	$6.49 \cdot 10^6$	$1895 \cdot 10^6$	0.075	0.0017	8.7	0.30
90	120	$8.49 \cdot 10^6$	$2637 \cdot 10^6$	0.138	0.0023	13.0	0.34
100	120	$10.68 \cdot 10^6$	$3556 \cdot 10^6$	0.159	0.0032	13.5	0.40
110	155	$12.49 \cdot 10^6$	$4690 \cdot 10^6$	0.292	0.0043	19.2	0.41
125	155	$17.66 \cdot 10^6$	$6909 \cdot 10^6$	0.423	0.0064	22.8	0.48
140	175	$24.76 \cdot 10^6$	$8928 \cdot 10^6$	0.783	0.0088	32.0	0.53
160	205	$36.70 \cdot 10^6$	$14028 \cdot 10^6$	1.46	0.014	49.0	0.7
180	205	$50.58 \cdot 10^6$	$23220 \cdot 10^6$	2.04	0.023	52.0	0.8
200	240	$68.69 \cdot 10^6$	$36882 \cdot 10^6$	4.41	0.036	96.0	1.2

Coupling Types **SBLk u. SRLk** Size	Minimum spacer length $L_{min.}$ mm	Torsional Stiffness C_{T1} Type SBLk Nm/rad	Torsional Stiffness C_{T1} Type SRLk Nm/rad	Torsional Stiffness C_{TR} Nm · mm/rad	Mass moment of inertia Spacer with $L = L_{min.}$ kgm²	Mass moment of inertia per 10 mm tube length with $L > L_{min.}$ kgm²	Weight Spacer with $L = L_{min.}$ kg	Weight per 10 mm tube length with $L > L_{min.}$ kg
38	75	$0.83 \cdot 10^6$	$0.57 \cdot 10^6$	$186 \cdot 10^6$	0.00401	0.00011	2.17	0.11
48	80	$1.51 \cdot 10^6$	$1.35 \cdot 10^6$	$274 \cdot 10^6$	0.00876	0.00020	3.2	0.14
60	80	$2.53 \cdot 10^6$	$2.22 \cdot 10^6$	$537 \cdot 10^6$	0.0146	0.00041	4.4	0.18
70	100	$4.42 \cdot 10^6$	$3.96 \cdot 10^6$	$897 \cdot 10^6$	0.0368	0.00072	6.7	0.22
80	100	$6.48 \cdot 10^6$	$5.74 \cdot 10^6$	$1335 \cdot 10^6$	0.055	0.00113	8.2	0.29
90	100	$8.76 \cdot 10^6$	$7.95 \cdot 10^6$	$1895 \cdot 10^6$	0.075	0.0017	8.7	0.30
100	120	$11.66 \cdot 10^6$	$10.23 \cdot 10^6$	$2637 \cdot 10^6$	0.138	0.0023	13.0	0.34
110	120	$14.41 \cdot 10^6$	$12.58 \cdot 10^6$	$3556 \cdot 10^6$	0.159	0.0032	13.5	0.40
125	155	$17.25 \cdot 10^6$	$15.29 \cdot 10^6$	$4690 \cdot 10^6$	0.292	0.0043	19.2	0.41
140	155	$24.27 \cdot 10^6$	$21.45 \cdot 10^6$	$6909 \cdot 10^6$	0.423	0.0064	22.8	0.48
160	175	$32.35 \cdot 10^6$	$29.22 \cdot 10^6$	$8928 \cdot 10^6$	0.783	0.0088	32.0	0.53
180	205	$42.79 \cdot 10^6$	$39.14 \cdot 10^6$	$14088 \cdot 10^6$	1.46	0.014	49.0	0.7
200	205	$62.94 \cdot 10^6$	$58.83 \cdot 10^6$	$23220 \cdot 10^6$	2.04	0.023	52.0	0.8
225	240	$84.69 \cdot 10^6$	$79.13 \cdot 10^6$	$36882 \cdot 10^6$	4.41	0.036	96.0	1.2

Coupling Types **LBLk u. LRLk** Size	Minimum spacer length $L_{min.}$ mm	Torsional Stiffness C_{T1} Nm/rad	Torsional Stiffness C_{TR} Nm · mm/rad	Mass moment of inertia Spacer with $L = L_{min.}$ kgm²	Mass moment of inertia per 10 mm tube length with $L > L_{min.}$ kgm²	Weight Spacer with $L = L_{min.}$ kg	Weight per 10 mm tube length with $L > L_{min.}$ kg
32	70	$0.46 \cdot 10^6$	$90.5 \cdot 10^6$	0.0025	0.00010	1.81	0.11
38	70	$0.73 \cdot 10^6$	$113.2 \cdot 10^6$	0.0036	0.00011	2.16	0.11
48	75	$1.45 \cdot 10^6$	$202.4 \cdot 10^6$	0.0087	0.00020	2.36	0.14
60	75	$2.48 \cdot 10^6$	$410.2 \cdot 10^6$	0.015	0.00040	4.2	0.18
70	90	$4.47 \cdot 10^6$	$724.0 \cdot 10^6$	0.034	0.00070	6.7	0.22
80	90	$6.83 \cdot 10^6$	$1140.5 \cdot 10^6$	0.050	0.0011	7.4	0.29
90	90	$9.95 \cdot 10^6$	$1724 \cdot 10^6$	0.065	0.0017	8.9	0.30
100	105	$12.77 \cdot 10^6$	$2325 \cdot 10^6$	0.128	0.0023	13.3	0.34
110	105	$15.95 \cdot 10^6$	$3257 \cdot 10^6$	0.14	0.0032	14.1	0.40
125	130	$20.93 \cdot 10^6$	$4308 \cdot 10^6$	0.28	0.0043	20.6	0.40
140	130	$28.85 \cdot 10^6$	$6463 \cdot 10^6$	0.38	0.0064	23.7	0.48
160	145	$39.28 \cdot 10^6$	$8928 \cdot 10^6$	0.69	0.0088	33.2	0.53
180	170	$55.51 \cdot 10^6$	$14075 \cdot 10^6$	1.34	0.014	50	0.70
200	170	$80.85 \cdot 10^6$	$23218 \cdot 10^6$	1.96	0.023	59	0.79
225	200	$111.9 \cdot 10^6$	$36882 \cdot 10^6$	4.1	0.036	98	1.2

Required details to calculate the torsional stiffness of curved tooth couplings with spacer:

C_{T1} = Torsional stiffness of the complete coupling, including spacer, for length $L = L_{min}$ and bore $d_1;d_{2\ max.}$

C_{TR} = Relative torsional stiffness (Value as per table).

C_{T3} = Torsional stiffness of the complete coupling, including spacer, for length $L > L_{min}$ and bore $d_1;d_{2\ max.}$

The following formula is used for calculating the total torsional stiffness:

$$C_{T3} = \frac{1}{\frac{1}{C_{T1}} + \frac{L - L_{min}}{C_{TR}}} \text{ (Nm/rad)}$$

In addition to the torsional stiffness, the tables include the mass moments of inertia and the weights of the spacers. These values are given for the spacer with a length of $L = L_{min}$ and for spacer part-lengths of 10 mm with $L > L_{min.}$

The total values for spacers with $L > L_{min}$ can be calculated as follows:

W_{Lmin} = Values for spacer with $L = L_{min}$

W_{10} = Values for 10 mm tube length of spacer

$$W_{tot} = W_{Lmin} + \frac{W_{10} \cdot (L - L_{min})}{10}$$

The values for the mass moment of inertia or the weight values may optionally be used for W.

Subject to change due to technical improvement.

Parallel Misalignment, Torsional Stiffness Data for Curved Tooth Couplings with Intermediate Shaft

Contrary to couplings with spacer, no minimum lengths are specified for intermediate shafts. The tables hence only contain data for the coupling, though taking into account those parts of the intermediate shaft which are located inside the hub seats.

Required details to determine the torsional stiffness of curved tooth couplings with intermediate shaft:

Coupling Types **SBG/SRG** Size	Torsional Stiffness C_{T1} Nm/rad	Torsional Stiffness C_{T2} Nm/rad
30	$0.48 \cdot 10^6$	Calculated acc. to the formula on page 51.
40	$1.19 \cdot 10^6$	
50	$2.19 \cdot 10^6$	
60	$3.92 \cdot 10^6$	
70	$5.56 \cdot 10^6$	
80	$8.52 \cdot 10^6$	
90	$12.1 \cdot 10^6$	
100	$14.2 \cdot 10^6$	
110	$18.5 \cdot 10^6$	
125	$25.5 \cdot 10^6$	
140	$38.7 \cdot 10^6$	
160	$57.3 \cdot 10^6$	
180	$73.9 \cdot 10^6$	
200	$101.2 \cdot 10^6$	
220	$150.0 \cdot 10^6$	
240	$184.3 \cdot 10^6$	
260	$235.6 \cdot 10^6$	
280	$299.4 \cdot 10^6$	
300	$357.3 \cdot 10^6$	
320	$458.5 \cdot 10^6$	
340	$620.4 \cdot 10^6$	

Coupling Types **SBGk/SRGk** Size	Torsional Stiffness C_{T1} Nm/rad	Torsional Stiffness C_{T2} Nm/rad
38	$1.02 \cdot 10^6$	Calculated acc. to the formula on page 51.
48	$2.08 \cdot 10^6$	
60	$3.40 \cdot 10^6$	
70	$6.30 \cdot 10^6$	
80	$9.15 \cdot 10^6$	
90	$12.0 \cdot 10^6$	
100	$17.5 \cdot 10^6$	
110	$20.0 \cdot 10^6$	
125	$27.1 \cdot 10^6$	
140	$36.7 \cdot 10^6$	
160	$54.9 \cdot 10^6$	
180	$72.8 \cdot 10^6$	
200	$96.8 \cdot 10^6$	
225	$131.9 \cdot 10^6$	
250	$180.7 \cdot 10^6$	
265	$218.2 \cdot 10^6$	
280	$275.1 \cdot 10^6$	
315	$347.9 \cdot 10^6$	
335	$415.6 \cdot 10^6$	
355	$528.1 \cdot 10^6$	
375	$705.6 \cdot 10^6$	

C_{T1} = torsional stiffness of the coupling with bore $d_3;d_{4\ max.}$. This includes the values of the intermediate shaft with a diameter corresponding to $d_1;d_{2\ max.}$, but only within the range of the hub lengths D. For the exposed part of the shaft, these data have to be calculated in addition.

C_{T2} = torsional stiffness of the intermediate shaft.

C_{T3} = torsional stiffness of the complete coupling.

The formula below is used to calculate the total torsional stiffness:

$$C_{T3} = \frac{1}{\frac{1}{C_{T1}} + \frac{1}{C_{T2}}} \text{ (Nm/rad)}$$

Normally, the diameter d_1; $d_{2\ max.}$ corresponds to the nominal size of the coupling. In the range of the hub length D, shaft diameters which differ from $d_1;d_{2\ max.}$ only have an insignificant effect on the total torsional stiffness of the coupling.

Coupling Types **LBGk/LRGk** Size	Torsional Stiffness C_{T1} Nm/rad	Torsional Stiffness C_{T2} Nm/rad
32	$0.69 \cdot 10^6$	Calculated acc. to the formula on page 51.
38	$1.25 \cdot 10^6$	
48	$2.64 \cdot 10^6$	
60	$4.16 \cdot 10^6$	
70	$7.98 \cdot 10^6$	
80	$12.1 \cdot 10^6$	
90	$16.9 \cdot 10^6$	
100	$23.5 \cdot 10^6$	
110	$27.3 \cdot 10^6$	
125	$40.5 \cdot 10^6$	
140	$52.6 \cdot 10^6$	
160	$76.6 \cdot 10^6$	
180	$112.1 \cdot 10^6$	
200	$147.9 \cdot 10^6$	
225	$206.6 \cdot 10^6$	

The maximum permissible static parallel misalignment depends on the permissible angular misalignment and on the tooth center distance between both coupling halves. This distance may be varied for couplings with spacer or intermediate shaft. The dimension tables, therefore, do not contain data on the permissible misalignment.

The formulae stated below can be used to determine these values.

1) The same formulae are used for couplings with retaining ring and for comparable designs without retaining ring. However, the factor 0.010 must be inserted before the bracket.

Couplings with spacer, without retaining ring [1)]

C = length of coupling half acc. to dimension table

L = distance between the flange faces of the spacer

H = length of the coupling sleeve acc. to dimension table

Series SBL

$$\Delta_{Kr} = 0.026 \cdot (1.6 \cdot C + L)$$

Series SBLk

$$\Delta_{Kr} = 0.013 \cdot (1.6 \cdot H + L)$$

Series LBLk

$$\Delta_{Kr} = 0.013 \cdot (H + L)$$

Couplings with intermediate shaft, without retaining ring [1)]

L = total length of intermediate shaft, including hub seats

D = length of coupling hub acc. to dimension table

Series SBG

$$\Delta_{Kr} = 0.026 \cdot (L - 1.6 \cdot D)$$

Series SBGk*

$$\Delta_{Kr} = 0.013 \cdot (L - 1.4 \cdot D)$$

Series LBGk

$$\Delta_{Kr} = 0.013 \cdot (L - 0.66 \cdot D)$$

* only applicable to couplings up to size 225.

Subject to change due to technical improvement.

Keyway Sealing, Tooth Backlash Control Device

Keyway Sealing

With keyed shaft-hub connections, the inner hub sides of the curved tooth couplings must be sealed to prevent loss of oil or grease. This is particularly important for couplings with retaining ring, which have a higher lubricant level than the basic models. Suitable packing means are lead, synthetic resin or other oil and grease resistant sealing products.

Sealing may be accomplished as shown below.
For non-continuous keys, designs according to Fig. 1 or 2 are preferred.

The recess in the hub provides a run-out for the keyway, thus maintaining the sealing surface between the hub and the shaft.

There is no sealing surface, if continuous keys are used. In such a case, we recommend a solution with sealing covers as shown in Fig. 3 and 4. Please specify the required design in your enquiry or order.

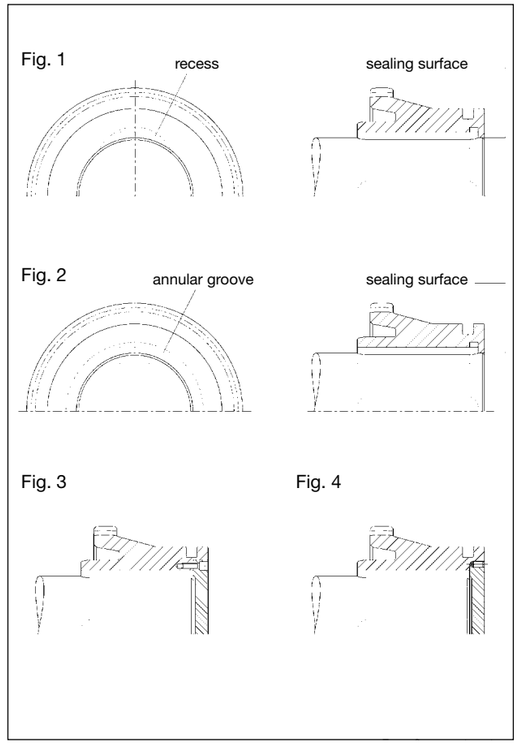

Tooth Backlash Control

The tooth backlash control device for curved tooth couplings allows quick and easy inspection of the coupling teeth at the site of installation. It is not necessary to disassemble the coupling.

The backlash of the inner and outer teeth is measured directly at the tooth mesh. Eventual changes can easily be detected by comparing the results of the measurements with the specified values. Hence, the current state of the coupling can be evaluated without difficulty at any time.

Such regularly performed inspections ensure permanent operational dependability of the coupling.

The backlash control device consists of an inspection opening in the coupling sleeve, which is closed by a screw with a gasket. It is located above the center of the curved teeth. It is optionally possible to arrange several of these openings around the coupling circumference.

The screw is removed to perform the inspection. By turning the outer sleeve, the tooth flanks are brought into contact on one side. The backlash between the exposed tooth flanks to the curved tooth center is then measured. The use of a feeler gauge is recommended. If the tooth flanks do not come into contact on one side, the total backlash is determined by adding up the flank clearance of both sides.

The following coupling series of this catalogue can be equipped with a tooth backlash control device:

SB, SBk
SBR, SBRk
SBL, SBLk
SRL, SRLk
SBG, SBGk
SRG, SRGk
SBD, SBkD
SBT, SBkT
VSB

The comparable types of the LBk series and HBk couplings can also be equipped with a backlash control device, but this involves more complex measures.

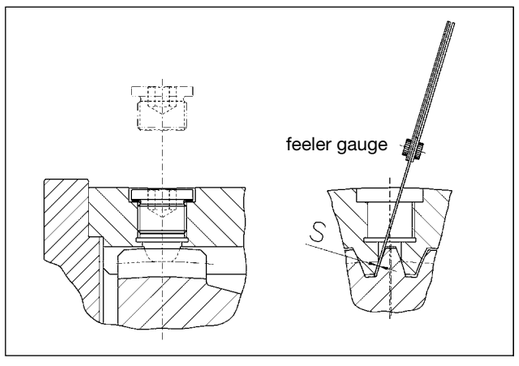

Shaft - Hub Connections

Fig. 1

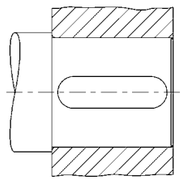

Fig. 2

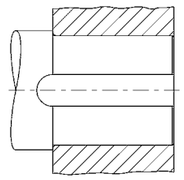

Fig. 3

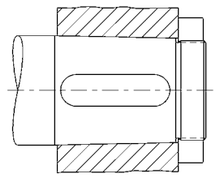

Fig. 4

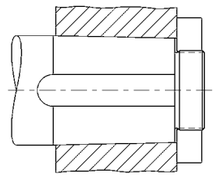

Fig. 5

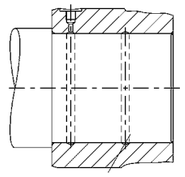

Fig. 6

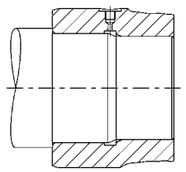

Fig. 7

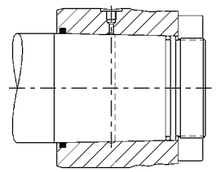

Fig. 8

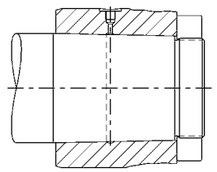

Fig.	1	2	3	4	5	6	7	8
Utilization of space	◐	○	◐	○	○	◐	◐	○
Production	◐	◐	◐	◐	○	●	◐	○
Insensitiveness to damage	○	○	○	○	◐	◐	○	◐
Operation quality	◐	◐	◐	◐	○	○	○	○
Axial positioning	○	○	◐	◐	○	○	◐	◐
Transfer of force	◐	◐	◐	◐	○	○	◐	○
Installation, warm	○	○	○	○	○	○	●	○
Installation, cold	●	●	◐	◐	●	●	○	○
Removal	●	●	◐	◐	◐	○	◐	○

○ favorable ◐ neutral ● less favorable

Curved Tooth Couplings

Special Designs

Fig. 1

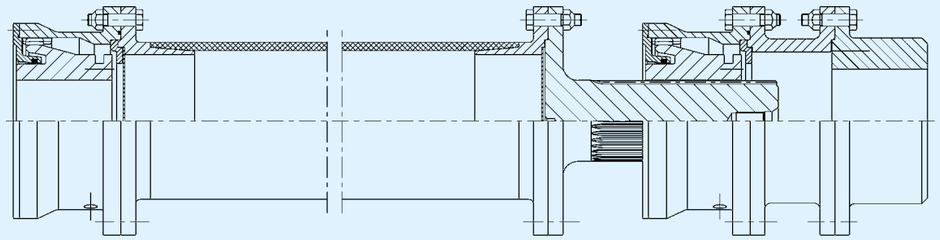

Fig. 2

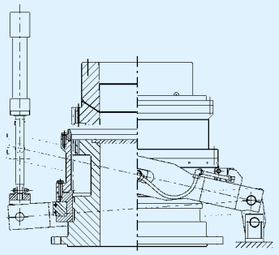

Fig. 3

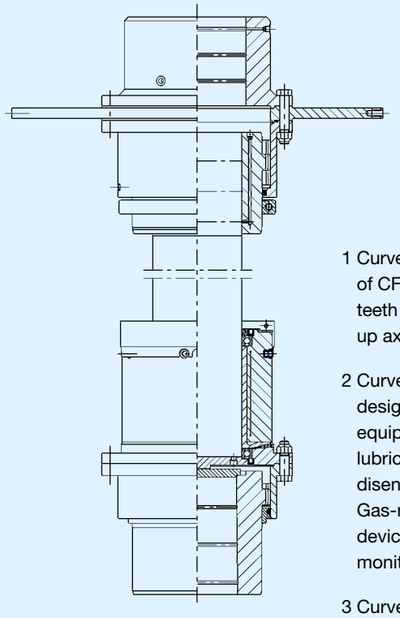

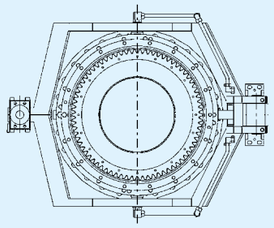

Fig. 4

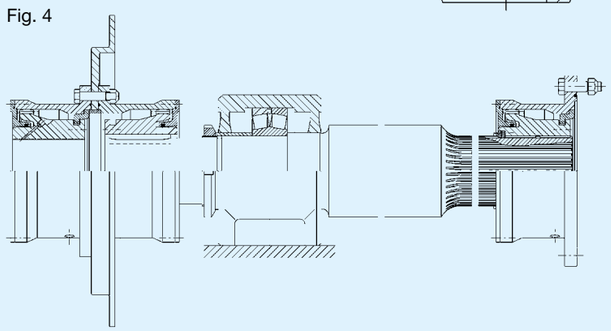

1 Curved tooth coupling with spacer of CFP/ GFP. Flange shaft with gear teeth according to DIN 5480 to take up axial displacement.

2 Curved tooth coupling of vertical design for a water power plant, equipped for oil injection lubrication, can be engaged and disengaged at standstill. Gas-nitrided gear teeth. Shifting device with hydraulic cylinder and monitoring sensors.

3 Curved tooth coupling with HYGUARD® safety coupling and brake disk, for vertical installation between motor and thruster. Gas-nitrided gear teeth.

4 Curved tooth coupling with intermediate shaft, pedestal bearing and brake disk, suitable to take up axial displacement.

Fig. 5

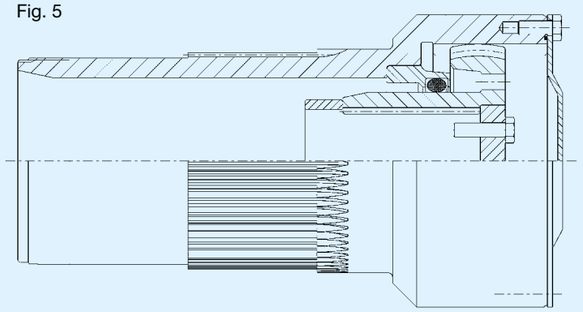

Fig. 6

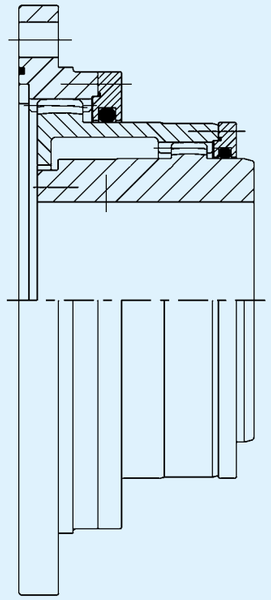

Fig. 7

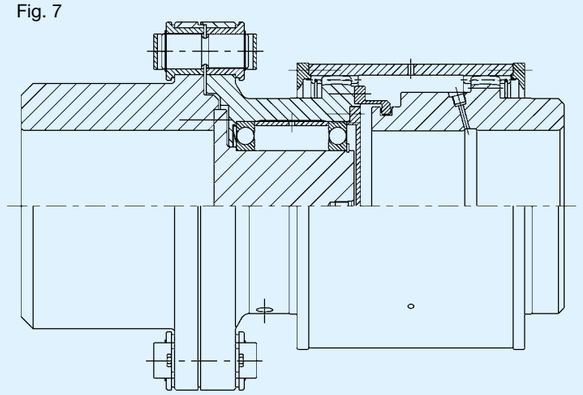

Fig. 8

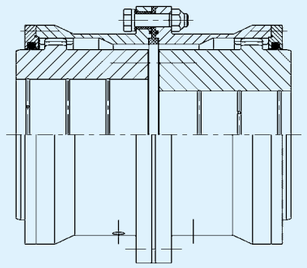

Fig. 9

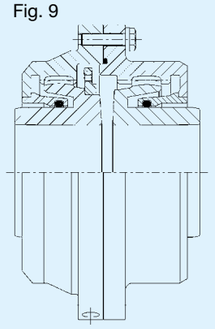

5 Curved tooth coupling for special vehicles.

6 Curved tooth coupling of short, double engagement construction form.

7 Curved tooth coupling with shear pin part, equipped for flow lubrication.

8 Curved tooth coupling electrically insulated.

9 Curved tooth coupling coupling for rail vehicles.

HYGUARD® Safety Couplings with Torque Limitation

Safety with HYGUARD®

HYGUARD® is a hydraulic safety element to protect machinery against overloads. In combination with curved tooth couplings, HYGUARD® works like a safety coupling with torque limitation. The release torque is adjustable and remains constant throughout the entire operation time.

Function Principle

HYGUARD® consists of two bushes being inserted into each other and which are pressure-tight closed at both ends. The little gap between these two parts is filled with hydraulic oil through a valve bore and then pressurized. This leads to an expansion in diameter. When mounted in between a shaft and a hub, HYGUARD® works like a clamping bush. The torque is transmitted by frictional engagement between the contact faces. The oil pressure in the annular gap is decisive for the torque transmission capacity. This pressure is adjustable, and hence, the torque, too.

Benefits

The combination of curved tooth couplings with HYGUARD® features many advantages:

- Transmission of high torques within little space
- Torsionally stiff-articulated shaft connection
- Overload protection with adjustable torque limitation
- Constant release torque throughout the entire operation time
- No interruption of operation due to material fatigue
- Low down-time costs
- Fast re-commissioning
- No cost-intensive stocking of spare parts

HYGUARD® protects valuable machinery.

Basic Designs

The basic type of the HYGUARD® safety coupling is the B-design. Due to the compact dimensions, this coupling can be combined with the most diverse drive elements without affecting their torque transmission capacity.
The HYGUARD® coupling sleeve is equally suitable for clamping fixed as well as rotating elements.

After a release, the coupling sleeve acts like a slide bearing. Circumferential speeds of up to 1.5 m/s at the sliding surface are possible. Therefore, the B-types are preferably installed in low-speed drives.
The BW-types are used for drive applications involving higher speeds. This series principally corresponds to the basic design, but is additionally equipped with roller bearings.
In contrast to the slide bearing version, this model is primarily selected for applications where sliding velocities above 1.5 m/s are to be anticipated after a release. The space requirement is, however, almost the same as for the B-types. Roller bearings are not required, if it is the question of a mere clamping function.

B-Series

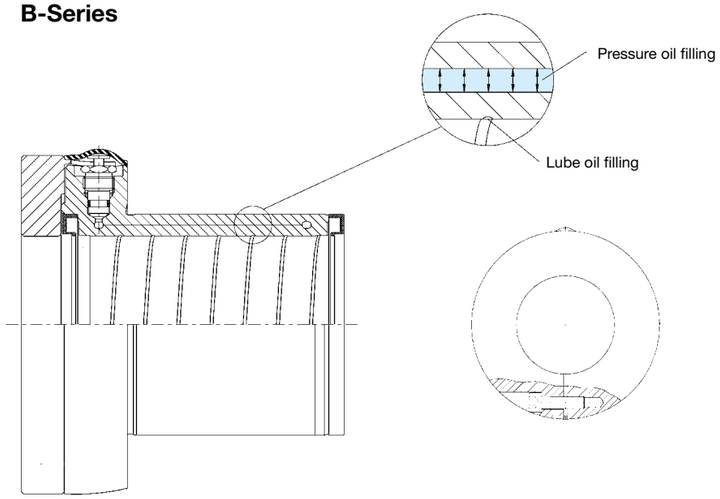

BWL-Series

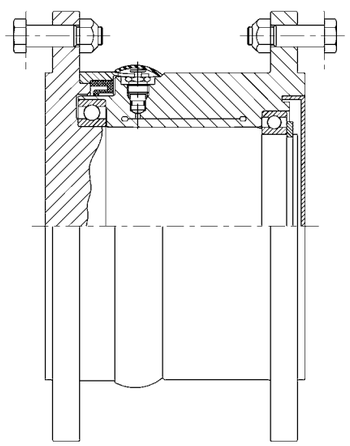

BWL-Series

HYGUARD® safety couplings of the BWL-series consist of the shaft part and the bush, and make up a complete coupling unit. They are equipped with connecting flanges on both sides, so that they can also be used as a spacer for curved tooth couplings or other connection elements. In this way, the benefits of the curved tooth couplings and those of the HYGUARD® safety system are combined to form a flexible safety coupling with torque limitation. It is also of advantage that the HYGUARD® Type BWL, like a spacer, can be assembled with already installed coupling halves.

Curved Tooth Couplings HYGUARD® Safety Couplings

Release

Two components are of essential importance for safe release: the shear ring and the shear tube. The shear ring and the shaft are rigidly connected, whereas the shear tube is accommodated in the movable part. If the operation torque exceeds the pre-determined value, the safety element starts to slide on the profiled surface. This results in a relative movement between the shaft and the hub, with the shear ring cutting off the shear tube. The system is depressurized within milliseconds and the connection is released. HYGUARD® protects through rapidness.

Re-commissioning

HYGUARD® is easy to activate again. A high-pressure pump and hydraulic oil are needed only. The pump is connected with the injector and hydraulic oil pressed into the ring gap, while the shear tube is open. It is advisable to use a pump with a pressure-regulating valve. If the pre-defined pressure for torque transmission is obtained, close the shear tube. The pressure chamber is now sealed hermetically and the working pressure remains constant. HYGUARD® is ready to operate.

LBk-BW combination

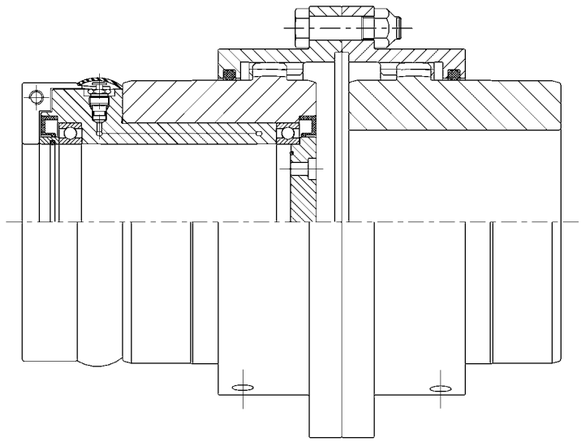

SBLk-BW combination

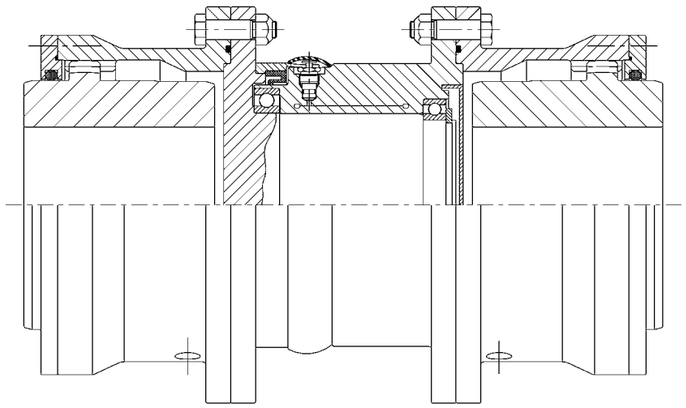

Application

HYGUARD® is a versatile machinery element and suitable for the most diverse applications. In rolling mills, for example, where conventional couplings with shear pins or similar safety elements had been used hitherto, HYGUARD® has contributed to substantial cost savings.

HYGUARD® is also ideal for machines and plants which have not yet been protected, or have only been protected to an insufficient extent. In most cases, the appropriate devices were missing, or the expenditure of work and costs was just too great. HYGUARD® is particularly suited for applications such as longitudinal shafts of paper mills, drawing rollers in the fiber industry, circular clamps of any kind, or solid matter pumps. All those driving machines where overloads or jams may be expected belong to the preferred application fields of HYGUARD®.

HYGUARD® becomes controllable in combination with a differential speed control device. This device releases an alarm or disengages automatically, if the connection is separated due to an overload, and a differential speed exists between the shaft and the hub.

HYGUARD® does not only protect machines, the TORLOC® version also fulfills clamping tasks. Whenever quick and safe clamping of machinery parts is essential, TORLOC® offers itself as a clamping element. It is used as a quick-grip coupling in test stands, or as a clamping coupling with fine adjustment feature in machine tools and production machines.

More information and technical details are contained in our HYGUARD® Safety Coupling catalog.

Technical Information

Directive 94/9/EC ‘ATEX’

Couplings for use in potentially explosive atmospheres

Machines intended for use in potentially explosive areas must fulfill particular requirements.

RENK is able to supply couplings for the equipment group II, category 2 or 3, according to Directive 94/9/EC.

The categories specify various conformity assessment procedures. Contrary to electrical equipment, EC type examinations are not imperative for category 2. It is sufficient to deposit the technical documentation with a Notified Body.

It is at the manufacturer’s discretion to arrange for type examinations. RENK is presently in the process of having type examinations carried out for the individual coupling series.

Directive 94/9/EC

This guideline, also known as ‘ATEX’, describes the requirements for equipment, components and protective systems intended for use in potentially explosive atmospheres. This directive has been binding since July 30th, 2003.

Today, this directive is not only applicable to electrical equipment, but to non-electrical equipment, too. Couplings are also subject to this directive.

Contrary to the Machinery Directive, a coupling is to be regarded as equipment within the scope of the 94/9/EC directive. The conformity of the equipment to the 94/9/EC directive is confirmed by the CE marking on the product and the declaration of conformity.

The particularities to be observed when using the individual coupling series in potentially explosive atmospheres are described in supplementary instruction manuals.

Attention:
It is imperative to observe the instructions contained in these supplementary manuals!

Upon request, supplementary manuals can be furnished for the coupling types listed in Table 1.

The operator of the equipment has to define the required equipment category and the temperature class for the product.

Table 1 contains the maximum possible explosion protection for the individual coupling series.

Fur further details, please contact RENK.

Maximum explosion protection of the coupling series

Coupling Series*	Type Examination	Equipment Category		Explosion Group	Temperature Class D	G	Ambient Temperature	Supplementary Manual
SB	x	2G		IIB		T4	$-20°C \le T_a \le 60°C$	B008027
SBk, LBk, HBk	x	2G		IIB		T3	$-20°C \le T_a \le 60°C$	B008027

Other types upon request * valid for all the models of the respective coupling series

Example for a CE-marking of a coupling

CE	Ex	II	2G	c	IIB	T4	X	$-20°C \le T_a \le 60°C$
CE-mark	*EX-mark*	*equipment group*	*equipment category*	*type of ignition*	*explosion group*	*temperature class*	*mark for particular instructions*	*ambient temperatures*

Calculation Formulae

1. Bending Critical Speed

Rough calculation of the bending critical speed of intermediate shafts, spacers and hub sleeves

$$n_k = 300 \cdot \sqrt{\frac{78.3 \cdot E \cdot I_{axial}}{G_1 \cdot l_0^4}}$$

n_k = bending critical speed, rpm
n = operation speed, rpm
E = module of elasticity = $20.6 \cdot 10^4$ N/mm²
G_1 = weight per 1 mm of length, kg/mm (see item 5)
l_0 = tooth center distance, mm
I_{axial} = (see item 4)

permissible for sub-critical operation
$n \le 0.75 \cdot n_k$

for over-critical operation
$n \ge 1.35 \cdot n_k$

2. Torsional stiffness C_{T2} for intermediate shafts

$$C_{T2} = \frac{I_{pol} \cdot G}{l \cdot 1000}$$

C_{T2} = torsional stiffness of the intermediate shaft Nm/rad
G = shear modulus = $7.95 \cdot 10^4$ N/mm²
l = length of intermediate shaft, mm
l = L - 2 · D
I_{pol} = (see item 4)

3. Mass moment of inertia J

Applicable to the shaft:

$$J = \frac{G_2 \cdot d^2}{8 \cdot 10^6}$$

Applicable to the spacer (tube):

$$J = \frac{G_2 \cdot (d_a^2 + d_i^2)}{8 \cdot 10^6}$$

J = mass moment of inertia, kgm²
G_2 = weight, kg (see item 5)
d = shaft diameter, mm
d_a = outer diameter of spacer, mm
d_i = inner diameter of spacer, mm

4. Geometrical moment of inertia I

Applicable to the shaft:

$$I_{axial} = \frac{d^4}{20.37}$$

Applicable to the spacer (tube):

$$I_{axial} = \frac{d_a^4 - d_i^4}{20.37}$$

I_{axial} = axial geometrical moment of inertia, mm⁴
d = shaft diameter, mm
d_a = outer diameter of spacer, mm
d_i = inner diameter of spacer, mm
I_{pol} = polar geometrical moment of inertia, mm⁴

$$I_{pol} = 2 \cdot I_{axial}$$

5. Weight G_2

Applicable to the shaft:

$$G_2 = \frac{d^2 \cdot 6.165 \cdot l}{10^6}$$

Applicable to the spacer (tube):

$$G_2 = \frac{(d_a^2 - d_i^2) \cdot 6.165 \cdot l}{10^6}$$

G_2 = weight, kg (see item 5)
d = shaft diameter, mm
d_a = outer diameter of spacer, mm
d_i = inner diameter of spacer, mm
l = length, mm
G_1 = weight per 1 mm length, kg/mm

$$G_1 = \frac{G_2}{l}$$

6. Circumferential speed

$$V = \frac{d \cdot n}{19100}$$

V = circumferential speed, m/s
d = brake disk diameter, mm
n = operation speed, rpm

RENK Aktiengesellschaft

Rheine Plant
Rodder Damm 170
48432 Rheine, Germany
Phone: +49 5971 790-0
Fax: +49 5971 790-208
Email: info.rheine@renk.biz

www.renk.eu

A company of the MAN Group